VIGI by tp-link

Datasheet
Security Never Shuts Down

8MP IR Panoramic Turret Network Camera

MODEL: InSight S485PI

4K **H.265+**

180° Ultra Wide Angle | Active Defense | People & Vehicle Analytics* | Human & Vehicle Classfication

Human & Vehicle Classification

Intelligently distinguishes humans and vehicles from other objects, so you receive more accurate event notifications.

Smart Detection

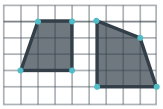

Intrusion Detection

Line-Crossing Detection

Object Removal Detection

Object Abandoned Detection

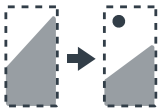

Scene Change Detection

Region Entering Detection

Region Exiting Detection

Loitering Detection

Abnormal Sound Detection

VIGI Surveillance Solution

The VIGI professional surveillance system by TP-Link is dedicated to protecting the business that you've worked hard to build—whenever, wherever.

Outstanding functions, reliable quality guarantees, and simplified installation work together to ensure your business stays safe and sound.

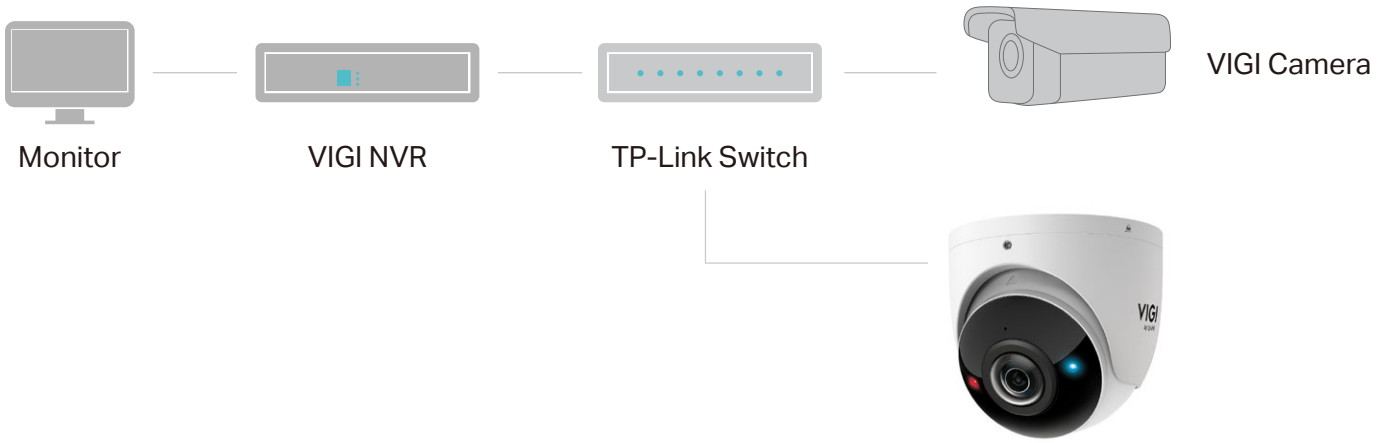

Flexible Installation

Easily route your camera's cable into a dropped ceiling or avoid drilling by slotting it through the camera's side outlet.

Build Features

Specifications

Camera	
Product Model	InSight S485PI
Image Sensor	1/2.7" Progressive Scan CMOS
Shutter Speed	1/3 to 1/10000 s
Slow Shutter	Yes
Min. Illumination	0.005 Lux; 0 Lux with IR light
Day/Night Mechanism	IR Cut Filter
Day/Night Switch	Unified/ Scheduled/ Auto
Lens	
Type	Fixed Focal Lens
Focal Length	1.65 mm
Aperture	F2.0
FOV	1.65mm: • Horizontal FOV: 180° • Vertical FOV: 86° • Diagonal FOV: 180°
Lens Mount	M12
DORI Distance	1.65mm • Detect: 44 m (144.36 ft) • Observe:18.33 m (60.15 ft) • Recognize: 8.8 m (28.87 ft) • Identify: 4.4 m (14.44 ft)
Angle Adjustment (Manual)	
Range	Pan: 0° to 360°, Tilt: 0° to 75°, Rotation: 0° to 360°
Illuminator	
IR LED	Quantity: 4 Range: 20m (65.62ft) Wavelength: 850nm
Illuminator On/Off Control	Auto/Scheduled/Always on/Always off

Video	
Max. Resolution	3840x2160
Main Stream	• Frame Rate: 50Hz: 1fps, 5fps, 10fps, 15fps, 20fps, 25fps 60Hz: 1fps, 5fps, 10fps, 15fps, 20fps, 25fps, 30fps • Resolution: 3840x2160, 2560x1440, 2304x1296, 2048x1280, 1920x1080, 1280x720 Note: If the image rotation is set to 90° or 270°, the frame rate only supports up to 20fps.
Sub-Stream	• Frame Rate: 50Hz: 1fps, 5fps, 10fps, 15fps, 20fps, 25fps 60Hz: 1fps, 5fps, 10fps, 15fps, 20fps, 25fps, 30fps • Resolution: 848x480, 704x576, 640x480, 640x360, 352x288, 320x240 Note: If the image rotation is set to 90° or 270°, the frame rate only supports up to 20fps.
Bit Rate Control	CBR, VBR
Video Compression	• Main Stream: H.265+/H.265/H.264+/H.264 • Sub-Stream: H.265/H.264
H.264 Type	High Profile
H.264+	Main Stream Supported
H.265 Type	Main Profile
H.265+	Main Stream Supported
Video Bit Rate	Main Stream: 256 Kbps to 8 Mbps Sub-Stream: 64 Kbps to 1 Mbps

Image	
Image Settings	• Mirror • Brightness • Contrast • Saturation • Sharpness • Exposure • WDR • White Balance • Prevent Overexposure to Infrared Light • HLC Adjustable by Client Software
Image Enhancement	BLC/3D DNR/HLC/SmartIR
Wide Dynamic Range	120 dB
SNR	≥ 52 dB
Image Parameters Switch	Yes
Privacy Mask	Up to 4 Masks
ROI	4 Region
OSD Setting	Yes
Audio	
Audio Communication	Two-Way Audio
Audio Input	Yes
Audio Output	Yes
Audio Compression	Yes
Audio Sampling Rate	8KHz
Environment Noise Filtering	Yes
Audio Bit Rate	64 Kbps (G.711 alaw)
Network	
Protocols	TCP/IP, UDP, ICMP, HTTP, HTTPS, DHCP, DNS, RTSP, NTP, UPnP UDP, SSL/TLS, FTP/SFTP, RTP, IPv4, IPv6, ARP
ONVIF	Yes
API	Open Network Video Interface (Profile S/T/G)

Simultaneous Live View	3 Main Streams & 3 Sub-Streams
Client	VIGI App, Web UI, VIGI VMS, VIGI Cloud VMS
Web Browser	• Google Chrome® 57 and above • Firefox® 52 and above • Safari® 11 and above • Microsoft® Edge 91 and above
Cloud	Yes
Security	Password Protection, HTTPS Encryption, IP Address Filter, Digest Authentication
Alarm and Event Management	
Smart Event	• Intrusion Detection • Line-Crossing Detection • Region Entering Detection • Region Exiting Detection • Object Abandoned Detection • Object Removal Detection • Loitering Detection • People Detection • Vehicle Detection • Abnormal Sound Detection • Scene Change Detection
Basic Event	• Motion Detection (Enhanced with Human & Vehicle Classification for more accurate alerts) • Video Tampering Detection • Exception (Illegal Login) • Alarm Input Device
Alarm Linkage	• Memory Card Video Recording • Upload to FTP Server • Alarm Output Device • Push Notifications • Send to Alarm Server • Active Defence-Sound Alarm • Active Defence-Light Alarm • Email Alarm

Deep Learning Function	
People & Vehicle Analytics*	Search and filter to people or vehicle of interest based on many different attributes, making post-event search faster and easier.
Interface	
Network Interface	1 RJ45 10/100M Self-Adaptive Ethernet Port, PoE
On-board Storage	Built-In Memory Card Slot, Support MicroSD Card, up to 512 GB**
Built-in Speaker	Yes
Built-in Microphone	Yes; Records Anything Going on within a 15-ft Radius of the Camera
Audio	1 Audio In, 1 Audio Out
Alarm	1 Alarm In, 1 Alarm Out Red-Blue Warning Lights
Reset Button	Yes
Power	DC Power Port
General	
Operating Temperature	-30 °C to 60 °C
Storage Temperature	-40 °C to 60 °C
Operating Humidity	95% or Less (Non-Condensing)
Storage Humidity	95% or Less (Non-Condensing)
Package Contents	• VIGI Network Camera • Quick Start Guide • Waterproof Cable Attachments • Mounting Accessories
Power Supply	• 12V DC ± 5%, Max. 18 W, 5.5 mm Coaxial Power Plug • PoE: 802.3at, class 4, Max. 21 W
Protection	IP67 Weatherproof, IK10 Vandal Proof
Material	Metal
Net Weight	0.76 Kg
Product Dimensions	4.4 × 4.4 × 4.3 in (112.3 × 112.3 × 110.2 mm)
Certifications	CE, NTRA, KC, FCC, VCCI, BSMI, ONVIF, IP67, IK10

Dimensions

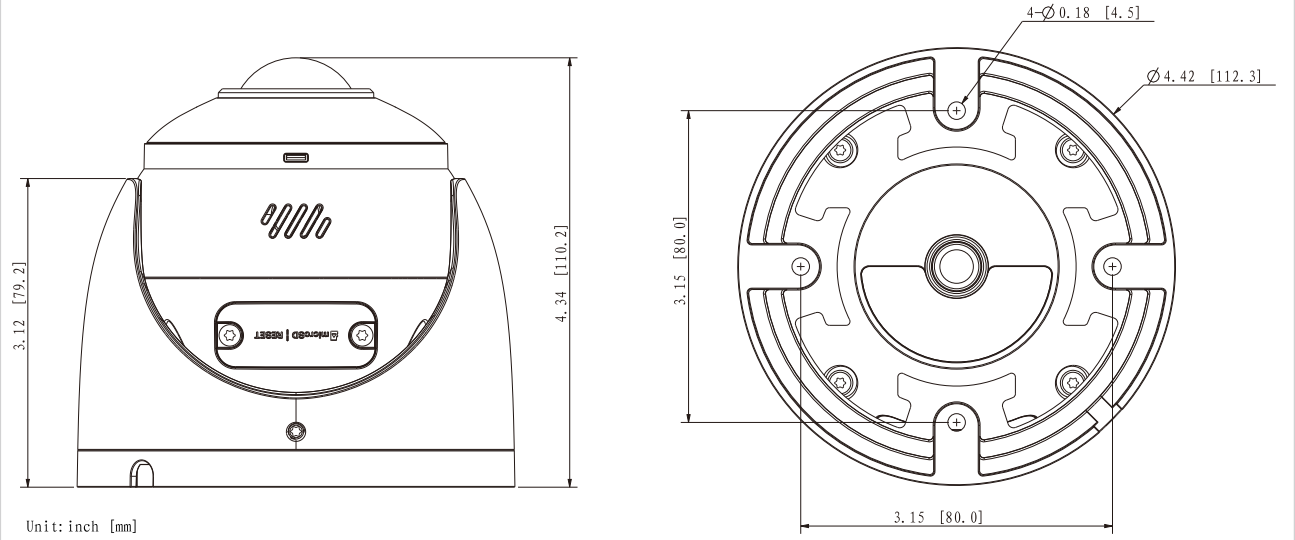

Security Standards Compliance

All VIGI products are fully compliant with the following security and safety standards:

EN 55032:2015 + A11:2020

EN 55035:2017 + A11:2020

EN IEC 61000-3-2:2019 + A1:2021

EN 61000-3-3:2013 + A2:2021

EN IEC 61000-6-3:2021 + AC:2022-01

EN IEC 61000-6-1:2019

EN 50130-4:2011 + A1:2014

EN 62368-1:2014 + A11:2017

EN IEC 63000:2018

(EU) 2023/826

*This feature is in development and will update with future software iterations, and it must be used with VIGI specified software.

**The Micro SD card and pole mounting kits are not included in the package.

Specifications are subject to change without notice and can be found at **www.vigi.com**.

©2025 TP-Link