tp-link | VIGI

**Datasheet**
Security Never Shuts Down

# Outdoor Full-Color

## Pan Tilt Network Camera

MODEL: VIGI C540(4mm)

**4MP | H.265+**

VIGI C540(4mm)

Human & Vehicle Classification

Smart Detection

Powerful Pan Tilt

IP66

Onboard Storage*

Two-Way Audio

## Human & Vehicle Classification

Intelligently distinguishes humans and vehicles from other objects, so you receive more accurate event notifications.

## Smart Detection

**Motion Detection**

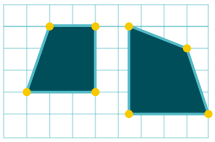

**Region Intrusion**

**Object Removal Detection**

**Region Exiting Detection**

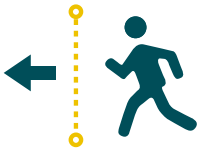

**Line-Crossing**

**Camera Tampering**

**Object Abandoned Detection**

**Region Entering Detection**

## SmartVid

IR

**Smart IR**

Keeps objects from being under-rendered when far away or overexposed when close to camera at night.

WDR

**Wide Dynamic Range**

Adjusts for lighting contrast to minimize shadowing effects and renders images true to life.

3D DNR

**3D DNR**

Removes abnormal pixelation to provide clearer video and eliminate distortion.

## VIGI Surveillance Solution

The VIGI professional surveillance system by TP-Link is dedicated to protecting the business that you've worked hard to build—whenever, wherever.

Outstanding functions, reliable quality guarantees, and simplified installation work together to ensure your business stays safe and sound.

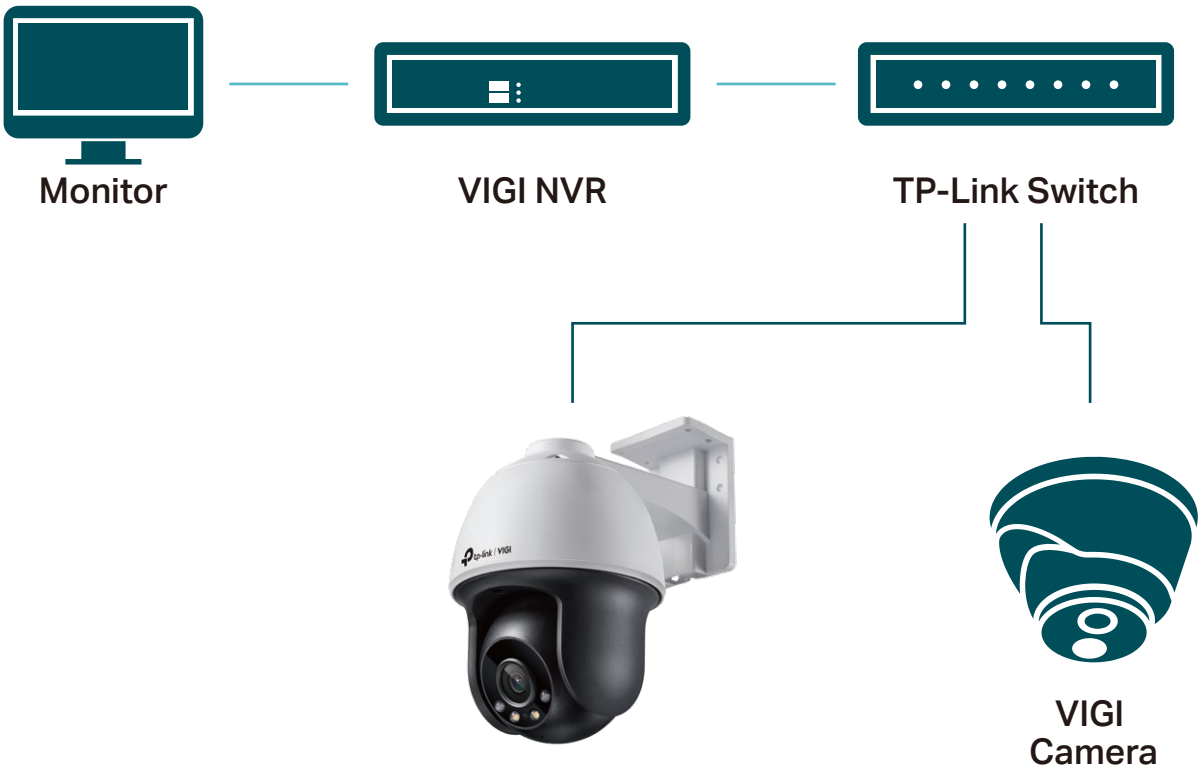


## Flexible Installation

Find the perfect vantage point by simply securing your camera to the ceiling, wall, or pole.

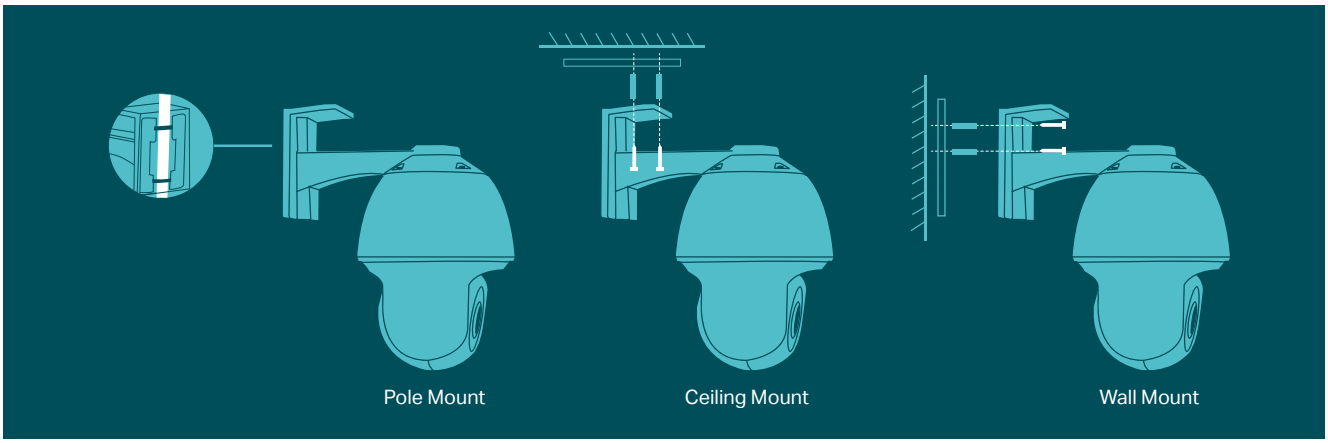

## Specifications

| Camera | |
|---|---|
| Product Model | VIGI C540 |
| Image Sensor | 1/3" Progressive Scan CMOS |
| Shutter Speed | 1/3 to 1/10000 s |
| Slow Shutter | Yes |
| Min. Illumination | 0.005 Lux; 0 Lux with IR/White Light |
| Day/Night Mechanism | IR Cut Filter |
| Day/Night Switch | Unified/ Scheduled/ Auto |
| **PTZ** | |
| Pan/Tilt Range | Pan: 0° to 350°, Tilt: 0° to 120° |
| Pan Speed | Configurable from 8° to 44°/s; Preset Speed: 44°/s |
| Tilt Speed | Configurable from 8° to 44°/s, Preset Speed 44°/s |
| Manual Control Speed | Configurable from 8° to 35°/s |
| Presets | 300 |
| Patrol Scan | 8 patrols, up to 8 presets for each patrol |
| Power-off Memory | Yes;<br>Auto restore to previous PT and lens status after power failure |
| Park Action | Yes;<br>Preset; Patrol Scan |
| 3D Positioning | Yes |
| **Lens** | |
| Focal Length | 4 mm |
| Aperture | F1.6 |
| Focus | Fixed |
| FOV | Horizontal FOV: 79°, Vertical FOV: 43°, Diagonal FOV: 93° |
| Lens Mount | M12 |
| DORI Distance | Detect: 80 m (262 ft)<br>Observe: 33 m (109 ft)<br>Recognize: 16 m (52 ft)<br>Identify: 8 m (26 ft) |

| Illuminator | |
|---|---|
| IR LED | Quantity: 2<br>Range: 30m<br>Wavelength: 850nm |
| White LED | Quantity: 2<br>Range: 30m |
| Illuminator On/Off Control | Auto/Scheduled/Always on/Always off |
| **Video** | |
| Max. Resolution | 2560 X 1440 |
| Main Stream | Frame Rate:<br>50Hz: 1fps, 5fps, 10fps, 15fps, 20fps, 25fps<br>60Hz: 1fps, 5fps, 10fps, 15fps, 20fps, 25fps, 30fps<br>Resolution:<br>2560x1440, 2304x1296, 2048x1280, 1920x1080, 1280x720<br>Note: If the image rotation is set to 90° or 270°, the frame rate only supports up to 20fps. |
| Sub-Stream | Frame Rate:<br>50Hz: 1fps, 5fps, 10fps, 15fps, 20fps, 25fps<br>60Hz: 1fps, 5fps, 10fps, 15fps, 20fps, 25fps, 30fps<br>Resolution:<br>640x480, 352x288, 320x240<br>Note: If the image rotation is set to 90° or 270°, the frame rate only supports up to 20fps. |
| Bit Rate Control | CBR, VBR |
| Video Compression | Main Stream: H.265+/H.265/H.264+/H.264<br>Sub-Stream: H.265/H.264 |
| H.264 Type | High Profile |
| H.264+ | Main Stream Supported |
| H.265 Type | Main Profile |
| H.265+ | Main Stream Supported |
| Video Bit Rate | Main Stream: 256 Kbps to 4 Mbps<br>Sub-Stream: 64 Kbps to 512 Kbps |

| Alarm and Event Management | |
|---|---|
| Smart Event | Human & Vehicle Classification, Area Intrusion Detection, Line-Crossing Detection, People Detection, Vehicle Detection, Region Entering Detection, Region Exiting Detection, Object Abandoned Detection, Object Removal Detection, Abnormal Sound Detection |
| Basic Event | Motion Detection, Video Tampering Detection, Exception ( Illegal Login) |
| Alarm Linkage | Memory Card Video Recording, Message Push, Audible Warning, White Light Flashing |
| Linkage Method | N/A |
| Output Notification | Message Push |
| **Image** | |
| Image Settings | Mirror, Brightness, Contrast, Saturation, Sharpness, Exposure, WDR,<br>White Balance, Prevent Overexposure to Infrared Light, HLC Adjustable by Client Software, Rotation(90°/270°) |
| Image Enhancement | BLC/3D DNR/HLC/SmartIR |
| Wide Dynamic Range | DWDR |
| SNR | ≥ 52 dB |
| Image Parameters Switch | Yes |
| ROI | 1 Region |
| Privacy Mask | Up to 4 Masks |
| OSD Setting | Yes |
| **Audio** | |
| Audio Communication | Two-Way Audio |
| Audio Input | Yes |
| Audio Output | Yes |
| Audio Compression | Yes |
| Audio Sampling Rate | 8KHz |
| Environment Noise Filtering | Yes |
| Audio Bit Rate | 64 Kbps(G.711 alaw) |

| Network | |
|---|---|
| Protocols | TCP/IP, UDP, ICMP, HTTP, HTTPS, DHCP, DNS, RTSP, NTP, UPnP UDP, SSL/TLS, FTP/SFTP, RTP, IPv4, IPv6, ARP |
| API | Open Network Video Interface (Profile S) |
| Web Browser | Google Chrome® 57 and above<br>Firefox® 52 and above<br>Safari® 11 and above<br>Microsoft® Edge 91 and above |
| Security | Password Protection, HTTPS Encryption, IP Address Filter, Digest Authentication |
| Simultaneous Live View | 3 Main Streams & 3 Sub-Streams |
| Client | VIGI App, VIGI Security Manager, Web UI |
| Cloud | Yes |
| ONVIF | Yes |
| **Interface** | |
| Network Interface | 1 RJ45 10/100M Self-Adaptive Ethernet Port, PoE |
| Power | DC Power Port |
| On-board Storage | Built-In Memory Card Slot, Support MicroSD Card, Up to 512 GB |
| Built-in Speaker | Yes |
| Built-in Microphone | Yes; Records Anything Going on within a 15-ft Radius of the Camera |
| Audio | N/A |
| Alarm | N/A |
| Reset Button | Yes |
| **General** | |
| Operating Temperature | -30–60 °C |
| Storage Temperature | -40–60 °C |
| Operating Humidity | 95% or Less (Non-Condensing) |
| Storage Humidity | 95% or Less (Non-Condensing) |
| Power Supply | 12V DC ± 5%, Max. 14 W, 5.5mm Coaxial Power Plug<br>PoE: 802.3at, class 4, Max. 16 W |

| | |
|---|---|
| Package Contents | VIGI Network Camera<br>Quick Start Guide<br>Waterproof Cable Attachments<br>Mounting Accessories |
| Material | Plastic |
| Protection | IP66 |
| Material | Plastic |
| Product Dimensions | 120 × 172 × 198 mm |
| Certifications | CE, RCM, BSMI, VCCI, RoHS, NTRA, KC |

## Dimensions

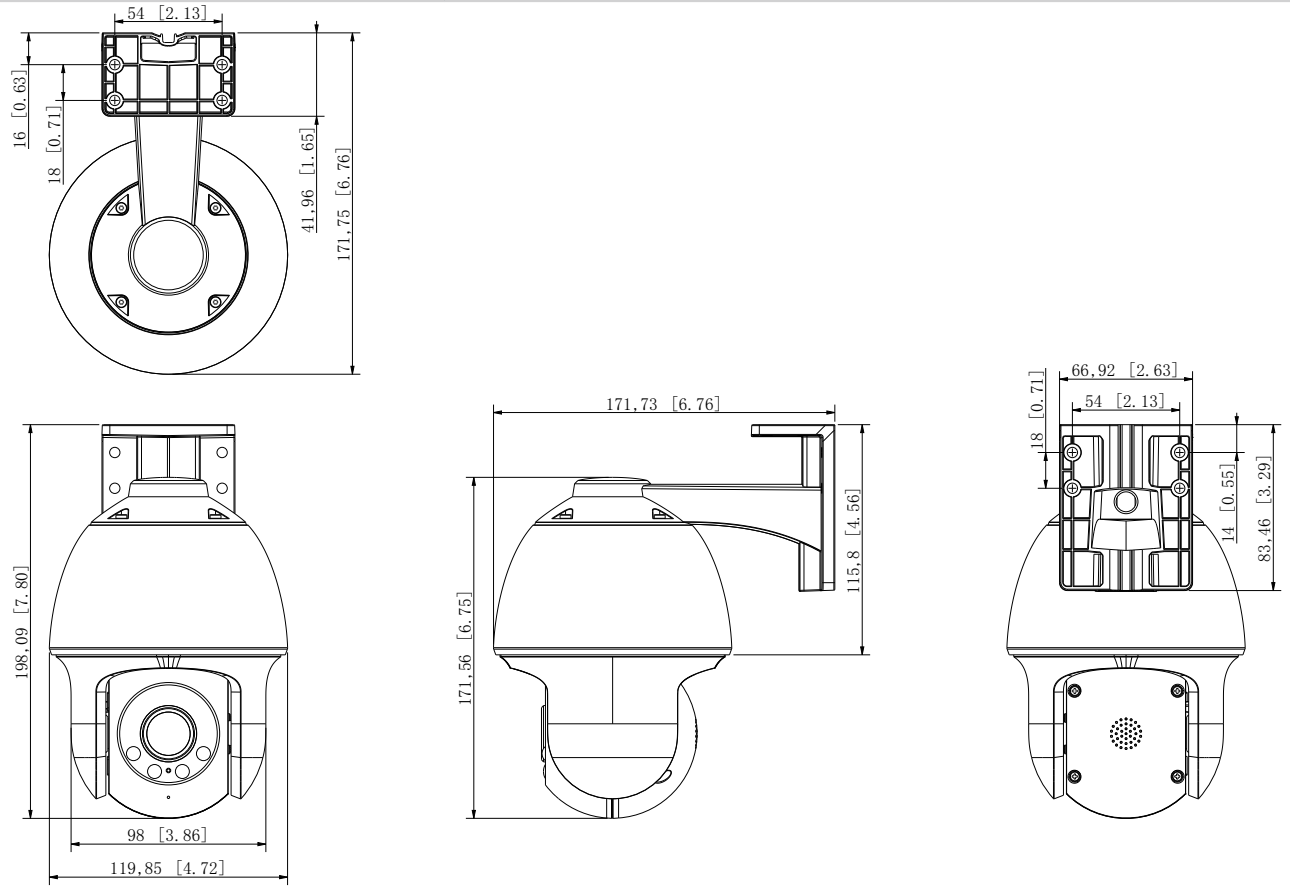


Security Standards Compliance

All VIGI products are fully compliant with the following security and safety standards:

EN 55032:2015 + A11:2020

EN 55035:2017 + A11:2020

EN IEC 61000-3-2:2019 + A1:2021

EN 61000-3-3:2013 + A2:2021

EN IEC 61000-6-3:2021 + AC:2022-01

EN IEC 61000-6-1:2019

EN 50130-4:2011 + A1:2014

EN 62368-1:2014 + A11:2017

EN IEC 63000:2018

(EU) 2023/826

*Micro SD card is not included in the package.

Specifications are subject to change without notice and can be found at www.tp-link.com.

©2024 TP-Link