tp-link | VIGI

Datasheet
Security Never Shuts Down

4MP Outdoor IR Motorized Varifocal Bullet Network Camera

MODEL: InSight S345ZI

Human & Vehicle Classification | Smart Detection | True WDR | IP67 Weatherproof

Human & Vehicle Classification

Intelligently distinguishes humans and vehicles from other objects, so you receive more accurate event notifications.

Smart Detection

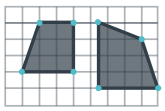

Intrusion Detection

Line-Crossing Detection

Object Removal Detection

Object Abandoned Detection

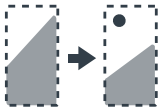

Scene Change Detection

Region Entering Detection

Region Exiting Detection

Loitering Detection

Abnormal Sound Detection

VIGI Surveillance Solution

The VIGI professional surveillance system by TP-Link is dedicated to protecting the business that you've worked hard to build—whenever, wherever.

Outstanding functions, reliable quality guarantees, and simplified installation work together to ensure your business stays safe and sound.

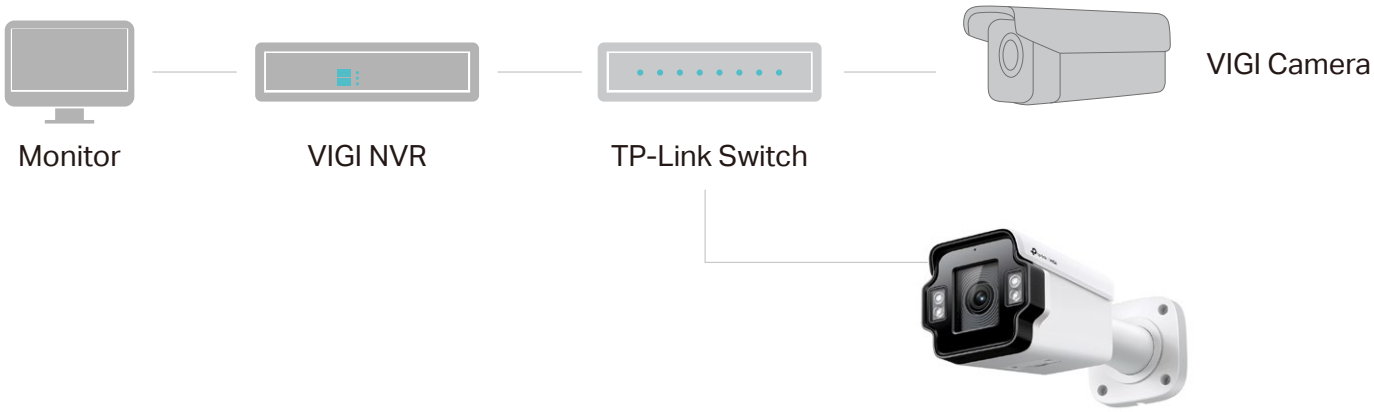

Flexible Installation

Find the perfect vantage point by simply securing your camera to the ceiling, wall, or pole.*

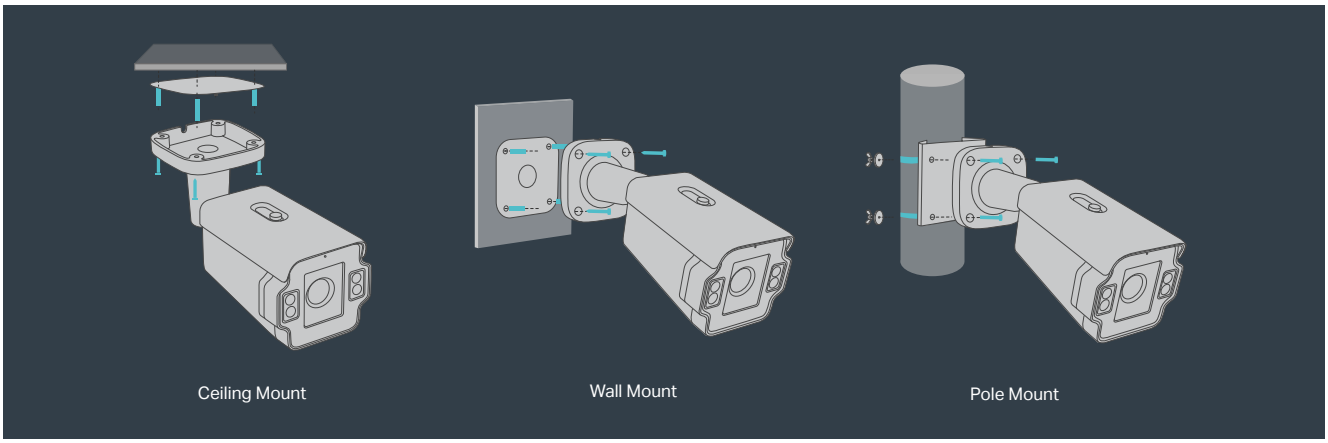

Build Features

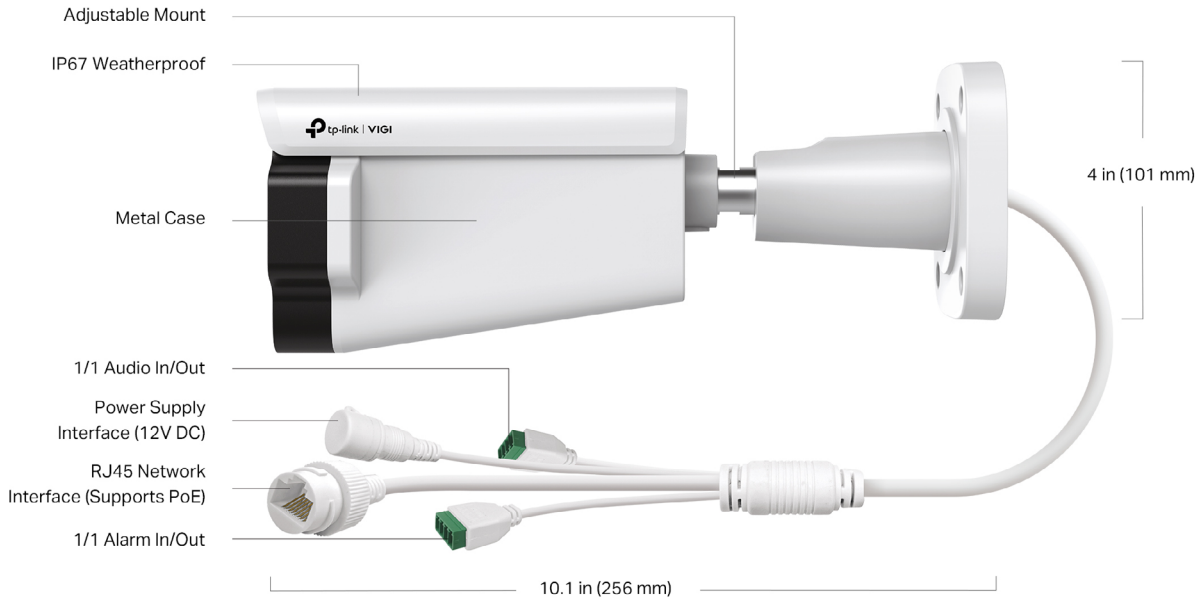

*SD card is not included in the package

Specifications

Camera	
Product Model	InSight S345ZI
Image Sensor	1/2.9" Progressive Scan CMOS
Shutter Speed	1/3 to 1/10000 s
Slow Shutter	Yes
Min. Illumination	0.005 Lux; 0 Lux with IR Light
Day/Night Mechanism	IR Cut Filter
Day/Night Switch	Unified/ Scheduled/ Auto
Lens	
Type	Motorized Varifocal Lens
Focal Length	2.7-13.5 mm (5X Optical Zoom)
Aperture	F1.6
FOV	2.7-13.5 mm: • Horizontal FOV: 29.6°-102.0° • Vertical FOV: 16.8°-53.8° • Diagonal FOV: 34.1°-122.8°
Lens Mount	ϕ14
DORI Distance	2.7-13.5 mm: • Detect: 66-207 m (217-579 ft) • Observe: 28-86 m (92-282 ft) • Recognize: 13-41 m (43-135 ft) • Identify: 7-21 m (23-69 ft)
Angle Adjustment (Manual)	
Range	Pan: 0° to 360°, Tilt: 0° to 90°, Rotation: 0° to 360°
Illuminator	
IR LED	Quantity: 4 Range: 60m Wavelength: 850nm
Illuminator On/Off Control	Auto/Scheduled/Always on/Always off

Video	
Max. Resolution	2688*1520
Main Stream	• Frame Rate: 50Hz: 1fps, 5fps, 10fps, 15fps, 20fps, 25fps 60Hz: 1fps, 5fps, 10fps, 15fps, 20fps, 25fps, 30fps • Resolution: 2688x1520, 2560x1440, 2304x1296, 2048x1280, 1920x1080 Note: If the image rotation is set to 90° or 270°, the frame rate only supports up to 20fps.
Sub-Stream	• Frame Rate: 50Hz: 1fps, 5fps, 10fps, 15fps, 20fps, 25fps 60Hz: 1fps, 5fps, 10fps, 15fps, 20fps, 25fps, 30fps • Resolution: 1280x720, 848x480, 704x576, 640x480, 640x360, 352x288, 320x240 •Note: If the image rotation is set to 90° or 270°, the frame rate only supports up to 20fps.
Bit Rate Control	CBR, VBR
Video Compression	• Main Stream: H.265+/H.265/H.264+/H.264 • Sub-Stream: H.265/H.264
H.264 Type	High Profile
H.264+	Main Stream Supported
H.265 Type	Main Profile
H.265+	Main Stream Supported
Video Bit Rate	• Main Stream: 256 Kbps to 6 Mbps • Sub-Stream: 64 Kbps to 1024 Kbps

Image	
Image Settings	• Mirror • Brightness • Contrast • Saturation • Sharpness • Exposure • WDR • White Balance • Prevent Overexposure to Infrared Light • HLC Adjustable by Client Software
Image Enhancement	BLC/3D DNR/HLC/SmartIR
Wide Dynamic Range	120 dB
SNR	≥ 52 dB
Image Parameters Switch	Yes
Privacy Mask	Up to 4 Masks
ROI	1 Region
OSD Setting	Yes
Audio	
Audio Communication	Two-Way Audio
Audio Input	Yes
Audio Output	Yes
Audio Compression	Yes
Audio Sampling Rate	8KHz
Environment Noise Filtering	Yes
Audio Bit Rate	64 Kbps (G.711 alaw)
Network	
Protocols	TCP/IP, UDP, ICMP, HTTP, HTTPS, DHCP, DNS, RTSP, NTP, UPnP UDP, SSL/TLS, FTP/SFTP, RTP, IPv4, IPv6, ARP
ONVIF	Yes
API	Open Network Video Interface (Profile S/T/G)
Simultaneous Live View	3 Main Streams & 3 Sub-Streams

Client	VIGI App, VIGI Security Manager, Web UI, VIGI VMS, VIGI Cloud VMS
Web Browser	• Google Chrome® 57 and above • Firefox® 52 and above • Safari® 11 and above • Microsoft® Edge 91 and above
Cloud	Yes
Security	Password Protection, HTTPS Encryption, IP Address Filter, Digest Authentication
Alarm and Event Management	
Smart Event	• Intrusion Detection • Line-Crossing Detection • Region Entering Detection • Region Exiting Detection • Object Abandoned Detection • Object Removal Detection • Loitering Detection • People Detection • Vehicle Detection • Abnormal Sound Detection • Scene Change Detection
Basic Event	• Motion Detection (Enhanced with Human & Vehicle Classification for more accurate alerts) • Video Tampering Detection • Exception (Illegal Login)
Alarm Linkage	• Memory Card Video Recording • Message Push • Audible Warning • Email Alarm • Upload Capture to FTP • Alarm Out Device
Interface	
Network Interface	1 RJ45 10/100M Self-Adaptive Ethernet Port, PoE
On-board Storage	Built-In Memory Card Slot, Support MicroSD Card, up to 512 GB**
Built-in Speaker	N/A

Built-in Microphone	Yes; Records Anything Going on within a 15-ft Radius of the Camera
Audio	1 Audio In, 1 Audio Out
Alarm	1 Alarm In, 1 Alarm Out
Reset Button	Yes
Power	DC Power Port
General	
Operating Temperature	-30 °C to 60 °C
Storage Temperature	-40 °C to 60 °C
Operating Humidity	95% or Less (Non-Condensing)
Storage Humidity	95% or Less (Non-Condensing)
Package Contents	• VIGI Network Camera • Quick Start Guide • Waterproof Cable Attachments • Mounting Accessories
Power Supply	• 12V DC ± 5%, Max.10.8 W, 5.5 mm Coaxial Power Plug • PoE: 802.3af/at, class 0, Max.12 W
Protection	IP67 Weatherproof, IK10 Vandal Proof
Material	Metal
Net Weight	1.04 Kg
Product Dimensions	10.1 × 3.9 × 4 in (256 × 100 × 101 mm)
Certifications	CE, NTRA, VCCI, KC, BSMI, FCC, IP67, IK10, ONVIF

Dimensions

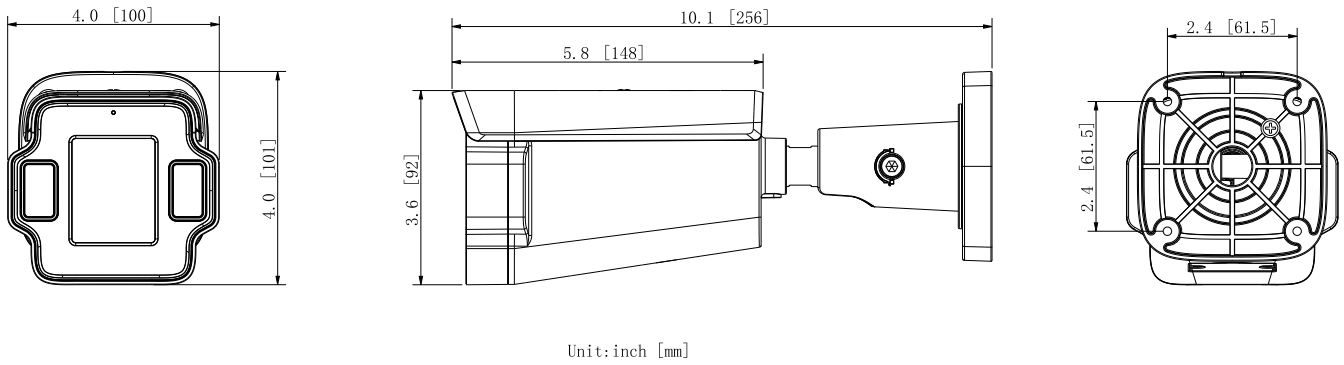

Security Standards Compliance

All VIGI products are fully compliant with the following security and safety standards:

EN 55032:2015 + A11:2020

EN 55035:2017 + A11:2020

EN IEC 61000-3-2:2019 + A1:2021

EN 61000-3-3:2013 + A2:2021
EN IEC 61000-6-3:2021 + AC:2022-01
EN IEC 61000-6-1:2019
EN 50130-4:2011 + A1:2014
EN 62368-1:2014 + A11:2017
EN IEC 63000:2018
(EU) 2023/826
*Pole mounting kit is not included in the package.
**Micro SD card is not included in the package.
Specifications are subject to change without notice and can be found at www.vigi.com.
©2025 TP-Link