tp-link | VIGI

Datasheet
Security Never Shuts Down

Full-Color

Turret Network Camera

MODEL: InSight S445 (2.8mm/4mm)

4MP H.265+

Human & Vehicle Classification | Smart Detection | Active Defense | True WDR | People & Vehicle Analytics[§]

Human & Vehicle Classification

Intelligently distinguishes humans and vehicles from other objects, so you receive more accurate event notifications.

Smart Detection

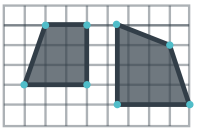

Intrusion Detection

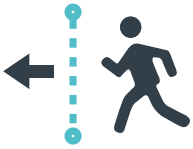

Line-Crossing Detection

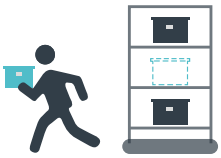

Object Removal Detection

Abandoned Object Detection

Region Entering Detection

Region Exiting Detection

Loitering Detection

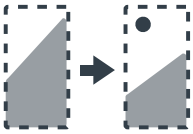

Scene Change Detection

VIGI Surveillance Solution

The VIGI professional surveillance system by TP-Link is dedicated to protecting the business that you've worked hard to build—whenever, wherever.

Outstanding functions, reliable quality guarantees, and simplified installation work together to ensure your business stays safe and sound.

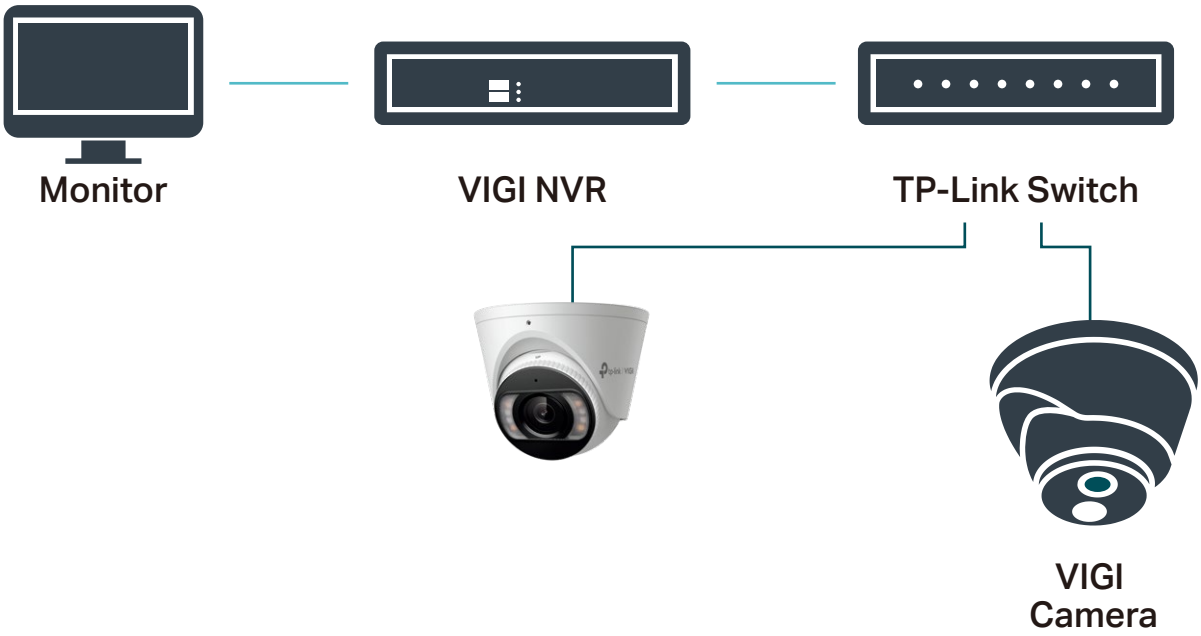

Flexible Installation

Easily route your camera's cable into a dropped ceiling or avoid drilling by slotting it through the camera's side outlet.

Build Features

Specifications

Camera	
Product Model	InSight S445 (2.8mm/4mm)
Image Sensor	1/2.7" Progressive Scan CMOS
Min. Illumination	0.005 Lux; 0 Lux with IR/White Light
Shutter Speed	1/3 to 1/10000 s
Slow Shutter	Yes
Day & Night Mechanism	IR Cut Filter
Day/Night Switch	Unified/Scheduled/Auto
Lens	
Type	Fixed Focal Lens
Focal Length	4 mm 2. 8mm
Aperture	F1.6
FOV	• 2.8 mm: Horizontal FOV: 100°, Vertical FOV: 54°, Diagonal FOV: 118° • 4 mm: Horizontal FOV: 80.4°, Vertical FOV: 41.8°, Diagonal FOV: 98.7°
Lens Mount	M12*P 0.5
DORI Distance	• 2.8 mm Detect: 64 m (210 ft) Observe: 27 m (89 ft) Recognize: 13 m (43 ft) Identify: 6 m (20 ft) • 4 mm Detect: 80 m (262 ft) Observe: 33 m (108 ft) Recognize: 16 m (52 ft) Identify: 8 m (26 ft)
Angle Adjustment (manual)	
Range	Pan: 0° to 360°, Tilt: 0° to 75°, Rotation: 0° to 360°
Illuminator	
IR LED	Quantity: 4 Range: 30m Wavelength: 850nm
White LED	Quantity: 4 Range: 30m
Illuminator On/Off Control	Auto/Scheduled/Always on/Always off

Video	
Max. Resolution	2688x1520
Main Stream	• Frame Rate 50Hz: 1fps, 5fps, 10fps, 15fps, 20fps, 25fps 60Hz: 1fps, 5fps, 10fps, 15fps, 20fps, 25fps, 30fps • Resolution: 2688x1520, 2560x1440, 2304x1296, 2048x1280, 1920x1080, 1280x720 Note: • If the image rotation is set to 90° or 270°, the frame rate only supports up to 20fps.
Sub-Stream	Frame Rate 50Hz: 1fps, 5fps, 10fps, 15fps, 20fps, 25fps 60Hz: 1fps, 5fps, 10fps, 15fps, 20fps, 25fps, 30fps Resolution: 848x480, 704x576, 640x480, 640x360, 352x288, 320x240 Note: If the image rotation is set to 90° or 270°, the frame rate only supports up to 20fps.
Bit Rate Control	CBR, VBR
Video Compression	Main stream: H.265/H.265+/H.264/H.264+ Sub-stream: H.265/H.264
H.264 Type	High Profile
H.264+	Main Stream Supported
H.265 Type	Main Profile
H.265+	Main Stream Supported
Video Bit Rate	• Main Stream: 256 Kbps to 6 Mbps • Sub-Stream: 64 Kbps to 512 Kbps
Image	
Image Settings	Mirror, Brightness, Contrast, Saturation, Sharpness, Exposure, WDR, White Balance, Prevent Overexposure to Infrared Light, HLC Adjustable by Client Software
Day/Night Switch	Unified, Scheduled, Auto
Image Enhancement	BLC/3D DNR/HLC/SmartIR
Wide Dynamic Range (WDR)	120 dB Note: When People & Vehicle Analytics is enabled, only DWDR is supported.
SNR	≥ 52 dB
Image Parameters Switch	Yes
Privacy Mask	Up to 4 Masks
ROI	1 Region
OSD Setting	Yes

Audio	
Audio Communication	Two-way audio
Audio Input	Yes
Audio Output	Yes
Audio Compression	Yes
Audio Sampling Rate	8KHz
Environment Noise Filtering	Yes
Audio Bit Rate	64 Kbps(G.711 alaw)
Network	
Protocols	TCP/IP, UDP, ICMP, HTTP, HTTPS, DHCP, DNS, RTSP, NTP, UPnP UDP, SSL/TLS, FTP/SFTP, RTP, IPv4, IPv6, ARP
API	ONVIF Profile S/T/G
Web Browser	Google Chrome® 57 and above Firefox® 52 and above Safari® 11 and above Microsoft® Edge 91 and above
Security	Password Protection, HTTPS Encryption, IP Address Filter, Digest Authentication
Simultaneous Live View	3 Main Streams & 3 Sub-Streams
Client	VIGI App, VIGI Security Manager, VIGI NVR, Web, VMS Local, VIGI Cloud VMS
Cloud	Yes
ONVIF	Yes
Interface	
Network Interface	1 RJ45 10/100M Self-Adaptive Ethernet Port, PoE
On-board Storage	Built-In Memory Card Slot, Support MicroSD Card, up to 512 GB*
Built-in Speaker	Yes
Built-in Microphone	Yes; Records Anything Going on within a 15-ft Radius of the Camera
Audio	N/A
Alarm	N/A
Reset Button	Yes
Power	DC Power Port

Alarm and Event Management	
Smart Event	• Human & Vehicle Classification • Intrusion Detection • Line-Crossing Detection • Region Entering Detection • Region Exiting Detection • Object Abandoned Detection • Object Removal Detection • Loitering Detection • People Detection • Vehicle Detection • Abnormal Sound Detection • Scene Change Detection
Basic Event	• Motion Detection • Video Tampering Detection • Exception (Illegal Login)
Alarm Linkage	• Memory Card Video Recording • Message Push • Audible Warning • White Light Flashing
Linkage Method	N/A
Output Notification	Message Push
Deep Learning Function	
People & Vehicle Analytics[§]	Search and filter to people or vehicle of interest based on many different attributes, making post-event search faster and easier.
General	
Operating Temperature	-30 °C to 60 °C
Storage Temperature	-40 °C to 60 °C
Operating Humidity	95% or Less (Non-condensing)
Storage Humidity	95% or Less (Non-condensing)
Power Supply	• 12V DC ± 5%, Max. 11 W, 5.5 mm Coaxial Power Plug • PoE: 802.3af/at, class 0, Max. 12 W
Material	Metal
Protection	IP67
Product Dimensions (L x W x H)	4.4 × 4.4 × 3.3 in (111 × 111 × 83.7 mm)
Package Contents	VIGI Network Camera Quick Start Guide Waterproof Cable Attachments Mounting Accessories
Net Weight	0.48 Kg
Certifications	CE, NTRA, VCCI, KC, BSMI, FCC, IC

Dimensions

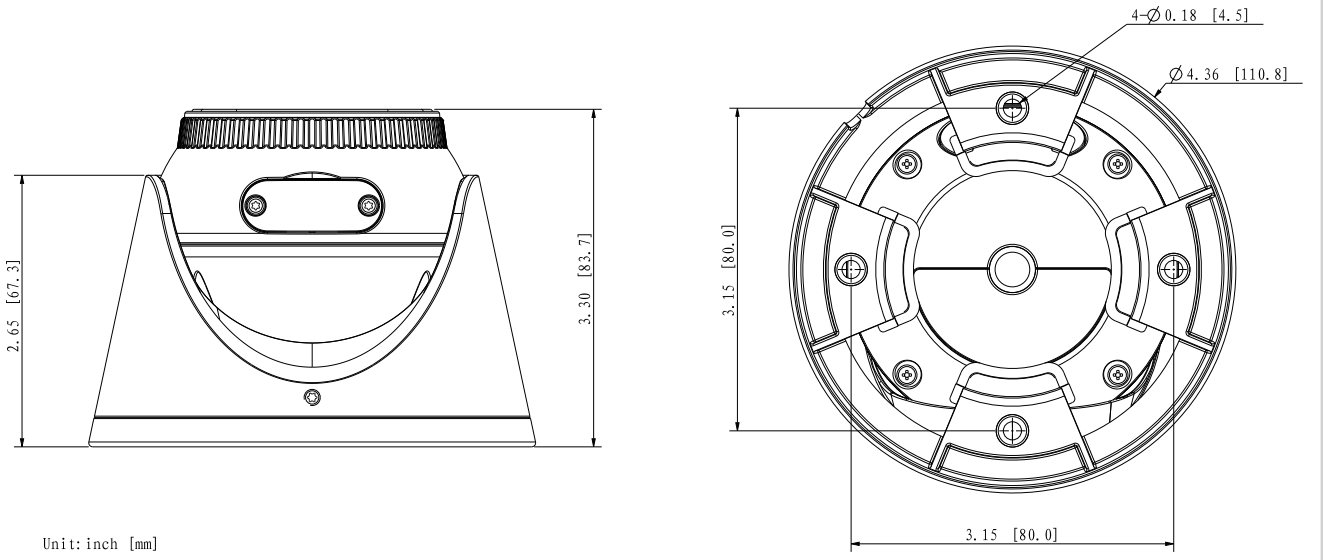

Security Standards Compliance

All VIGI products are fully compliant with the following security and safety standards:

EN 55032:2015 + A11:2020

EN 55035:2017 + A11:2020

EN IEC 61000-3-2:2019 + A1:2021

EN 61000-3-3:2013 + A2:2021

EN IEC 61000-6-3:2021 + AC:2022-01

EN IEC 61000-6-1:2019

EN 50130-4:2011 + A1:2014

EN 62368-1:2014 + A11:2017

EN IEC 63000:2018

(EU) 2023/826

§This function must be used with VIGI specified software.

*SD card is not included in the package.

Specifications are subject to change without notice and can be found at **www.vigi.com.**

©2025 TP-Link