tp-link | VIGI

# Installation Guide

Network Video Recorder

# Contents

**Chapter 1 Appearance** — **3**

1.1 Front Panel ..... 3

1.2 Rear Panel ..... 4

**Chapter 2 Installation** — **7**

2.1 Package Contents ..... 7

2.2 Safety Precautions ..... 7

2.3 Installation Tools ..... 10

2.4 Hard Drive Installation ..... 10

2.5 Product Installation ..... 12

**Chapter 3 Hardware Connection** — **14**

**Chapter 4 Configuration** — **15**

**Appendix FAQ** — **18**

# Chapter 1 Appearance

## 1.1 Front Panel

The figure is for demonstration purposes only. Your device may differ in appearance from the depicted.

- **VIGI NVR2016H**

The front panel of VIGI NVR2016H is shown as the following figure.

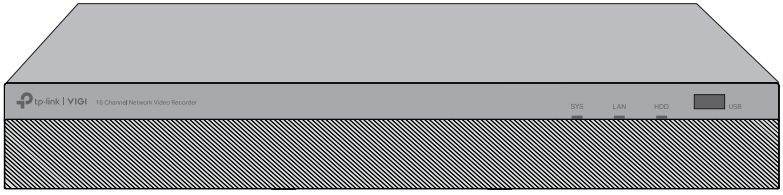


| LED | Indication |
|---|---|
| SYS | **On**: System is running normally.<br>**Off**: System is running abnormally. |
| LAN | **On**: Network is working properly.<br>**Flashing**: Data is being transmitted or received.<br>**Off**: Network is malfunctioning. |
| HDD | **On**: The HDD is normal.<br>**Off**: No HDD or the HDD is malfunctioning. |

**USB Port**
For additional devices such as USB mouse, USB storage device, and USB keyboard.

- **VIGI NVR2016H-16P/VIGI NVR2016H-16MP/VIGI NVR2008H-8MP**

The front panel of VIGI NVR2016H-16P/VIGI NVR2016H-16MP/VIGI NVR2008H-8MP is shown as the following figure.

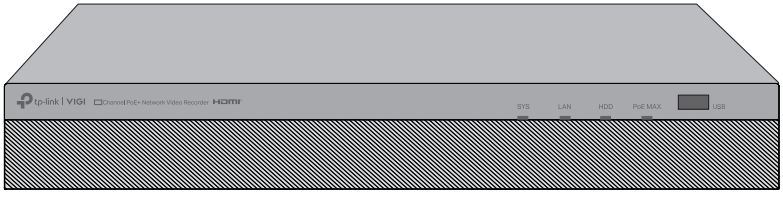

| LED | Indication |
|---|---|
| SYS | **On**: System is running normally.<br>**Off**: System is running abnormally. |
| LAN | **On**: Network is working properly.<br>**Flashing**: Data is being transmitted or received.<br>**Off**: Network is malfunctioning. |
| HDD | **On**: The HDD is normal.<br>**Off**: No HDD or the HDD is malfunctioning. |
| PoE Max | **On**: The total PoE power reaches the warning threshold.<br>**Flashing**: The total PoE power has reached the warning threshold for more than 2 minutes.<br>**Off**: The total PoE power does not reach the warning threshold. |

**USB Port**
For additional devices such as USB mouse, USB storage device, and USB keyboard.

## 1.2 Rear Panel

The figure is for demonstration purposes only. Your device may differ in appearance from the depicted.

- **VIGI NVR2016H**

The rear panel of VIGI NVR2016H is shown as the following figure.

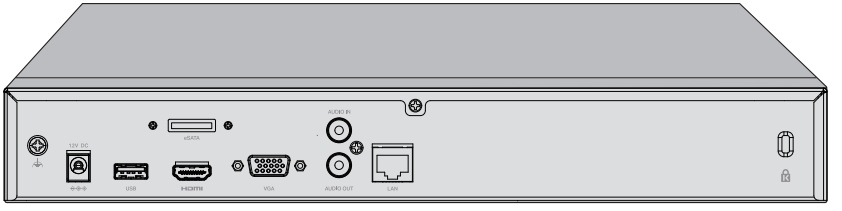


**Grounding Terminal:** The device comes with lightning protection mechanism. For detailed lightning protection measures, refer to the Lightning Protection Guide: https://www.tp-link.com/us/configuration-guides/lightning_protection_guide/.
**Power Socket:** Connect the female connector of the power cord here, and the male connector to the AC power outlet. Make sure that the

voltage of the power supply meets the requirement of the input voltage (100–240 V~ 50/60 Hz).

**USB Port:** Connect to additional devices such as USB mouse, USB storage device, and USB keyboard.

**eSATA:** Connect to external hard drive.

**HDMI®:** Output port for high-definition audio and video signals. Connect your monitor to this port if it uses HDMI connection.

**VGA:** Output port for analog video signals. Connect your monitor to this port if it uses VGA connection.

**Audio Input/Output:** Connector for audio input and output.

**LAN Port:** Connect to an Ethernet device (eg. router and switch).

**Kensington Security Slot:** Secure the lock (not provided) into the security slot to prevent the device from being stolen.

- **VIGI NVR2016H-16P/VIGI NVR2016H-16MP/VIGI NVR2008H-8MP**

The rear panel of VIGI NVR2016H-16P/VIGI NVR2016H-16MP is shown as the following figure.

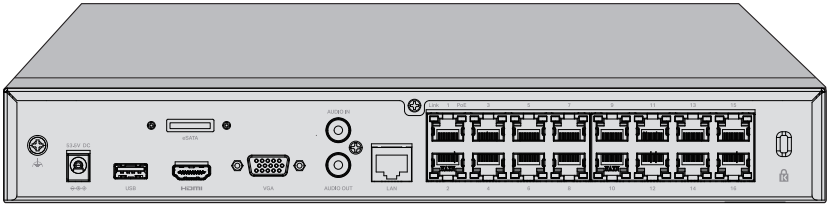


The rear panel of VIGI NVR2008H-8MP is shown as the following figure.

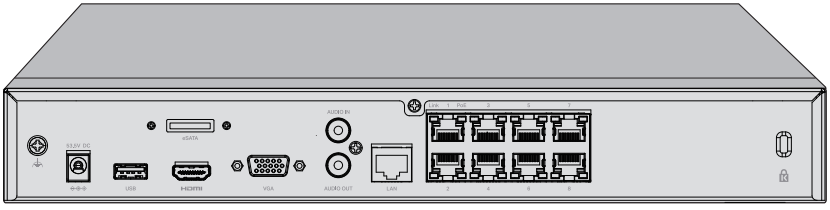


**Grounding Terminal:** The device comes with lightning protection mechanism. For detailed lightning protection measures, refer to the Lightning Protection Guide: https://www.tp-link.com/us/configuration-guides/lightning_protection_guide/.

**Power Socket:** Connect the female connector of the power cord here, and the male connector to the AC power outlet. Make sure that the voltage of the power supply meets the requirement of the input voltage

(100–240 V~ 50/60 Hz).

**USB Port:** Connect to additional devices such as USB mouse, USB storage device, and USB keyboard.

**eSATA:** Connect to external hard drive.

**HDMI®:** Output port for high-definition audio and video signals. Connect your monitor to this port if it uses HDMI connection.

**VGA:** Output port for analog video signals. Connect your monitor to this port if it uses VGA connection.

**Audio Input/Output:** Connector for audio input and output.

**LAN Port:** Connect to an Ethernet device (eg. router and switch).

**PoE Port:** Designed to connect to the device with a bandwidth of 100/10 Mbps. The port can also provide power for PoE PDs (recommended for PoE cameras).

| | |
|---|---|
| Link LED | **On:** A device is linked to the port but no activity.<br>**Flashing:** Transmitting or receiving data.<br>**Off:** No device is linked to the corresponding port. |
| PoE LED | **On:** The port is supplying power normally.<br>**Flashing:** Overload or short circuit is detected.<br>**Off:** Not providing PoE power on the port. |

**Kensington Security Slot:** Secure the lock (not provided) into the security slot to prevent the device from being stolen.

**Caution:**
Please use the provided power adapter.

# Chapter 2 Installation

## 2.1 Package Contents

Make sure that the package contains the following items. Please contact your distributor, if any of the listed items is damaged or missing. The figures are for demonstration only. The actual items may differ in appearance and quantity from the depicted.

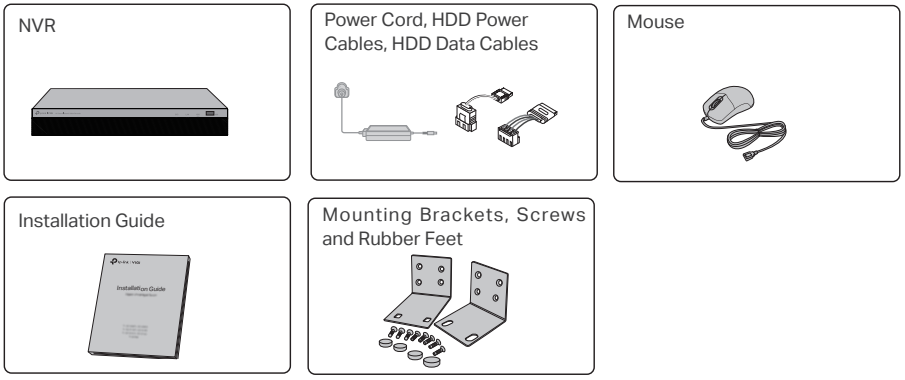


## 2.2 Safety Precautions

To avoid any device damage and bodily injury caused by improper use, you should observe the following rules.

- **Safety Precautions**

- Keep the power off during the installation.
- Wear an ESD-preventive wrist strap, and make sure that the wrist strap has a good skin contact and is well grounded.
- Use only the power cord provided with the device.
- Make sure that the supply voltage matches the specifications indicated on the rear panel of the device.
- Ensure that the device is installed in a well-ventilated environment and its ventilation hole is not blocked.
- Do not open or remove the cover of the device except when installing the HDD.

- Before cleaning the device, cut off the power supply. Do not clean it by the waterish cloth, and never use any other liquid cleaning method.
- Place the device with its bottom surface downward.

## ▪ Site Requirements

### Temperature/Humidity

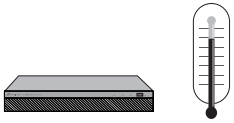

Keep the equipment room at an appropriate level of temperature and humidity. Too much or too little humidity may lead to bad insulation, leakage of electricity, mechanical property changes, and corrosion. High temperatures may accelerate aging of the insulation materials, significantly shortening the service life of the device.

### Clearness

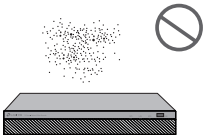

The dust accumulated on the device can be absorbed by static electricity and result in poor contact of metal contact points. Some measures have been taken for the device to prevent static electricity, but too strong static electricity can cause deadly damage to the electronic elements on the internal circuit board. To avoid the effect of static electricity on the operation of the device, attach much importance to the following items:

- Dust the device regularly, and keep the indoor air clean.
- Keep the device well grounded and ensure that the static electricity has been transferred.

### Electromagnetic Interference

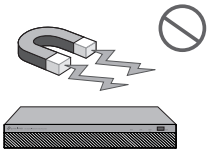

Electronic elements including capacitance and inductance on the device can be affected by external interferences, such as conducted emission by capacitance coupling, inductance coupling, and impedance coupling. To decrease the interferences, make sure to take the following measures:

- Use the power supply that can effectively filter interference from the power grid.
- Keep the device far from high-frequency and strong-current devices such as radio transmitting station.
- Use electromagnetic shielding when necessary.

### Lightning Protection

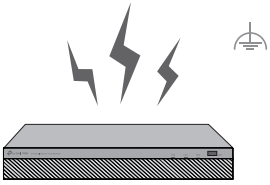

Extremely high voltage currents can be produced instantly when lightning occurs and the air in the electric discharge path can be instantly heated up to 20,000 °C. As this instant current is strong enough to damage electronic devices, more effective lightning protection measures should be taken.

- Ensure that the rack and the device are well earthed.
- Make sure the power socket has a good contact with the ground.
- Keep a reasonable cabling system and avoid induced lightning.
- Use the signal SPD (Surge Protective Device) when wiring outdoor.

**Note:**
For detailed lightning protection measures, refer to the Lightning Protection Guide:
https://www.tp-link.com/us/configuration-guides/lightning_protection_guide/.

### Installation Site

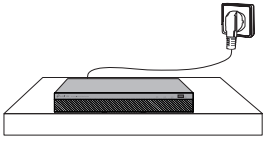

When installing the device on a rack or a flat workbench, attach much importance to the following items:

- The rack or workbench is flat, stable, and sturdy enough to support the weight of 5.5 kg at least.
- The rack or workbench has a good ventilation system. The equipment room is well ventilated.
- The rack is well grounded. Keep the device less than 1.5 meters away from the power socket.

## 2.3 Installation Tools

- Phillips screwdriver
- ESD-preventive wrist wrap
- Cables

**Note:**
These tools are not included with our product. If needed, you can purchase them separately.

## 2.4 Hard Drive Installation

Before installation, please disconnect the power from the network video recorder (NVR).

1. Remove the fixing screws on the side and back panels to open the cover of the NVR.

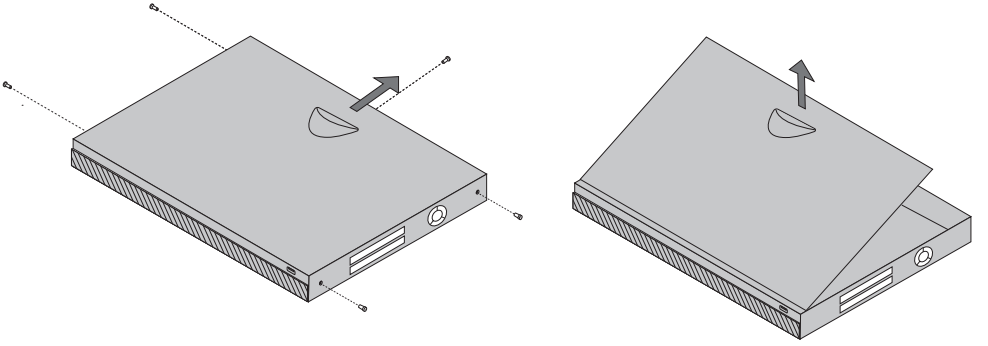

2. Choose the right size to install hard disk drive (HDD). Both 3.5-inch HDD and 2.5-inch HDD are supported.

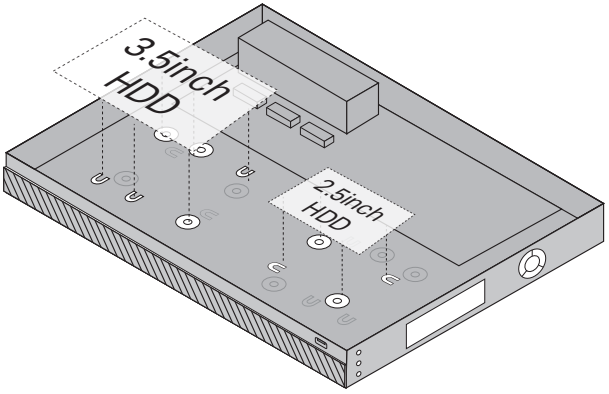


3. Match the screws on the HDD with the holes on the NVR. Here we take 3.5-inch HDD as an example. Up to 2 HDDs can be mounted at a time.

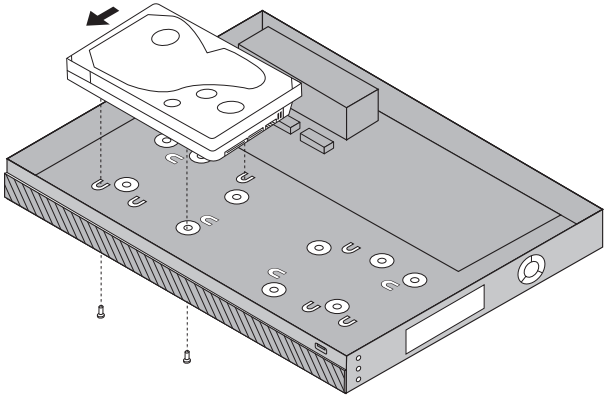

4. Connect one end of the power cable and data cable to the hard drive, and the other end to the NVR.

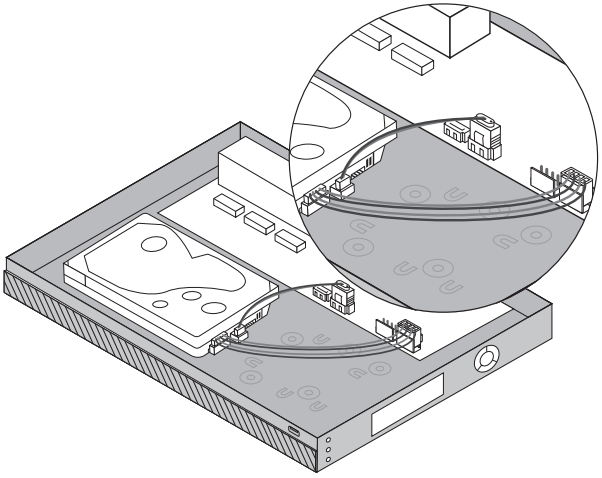

5. Replace the cover and fasten the screws of the NVR.

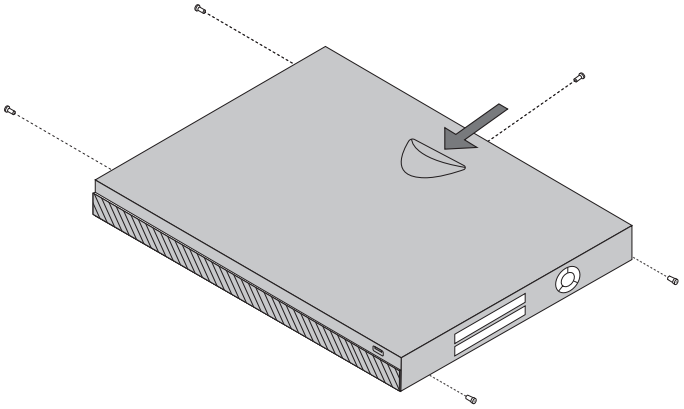

## 2.5 Product Installation

- **Desktop Installation**

To install the device on the desktop, follow the steps:

1. Set the device on a flat surface which is strong enough to support the entire weight of the device with all fittings.
2. Remove the adhesive backing papers from the rubber feet.
3. Turnover the device and attach the supplied rubber feet to the recessed areas on the bottom at each corner of the device.

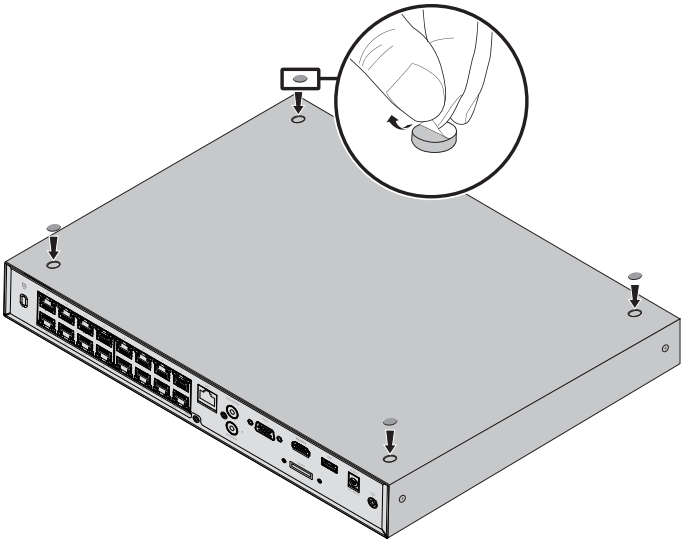

- **Rack Installation**

To install the device in an EIA standard-sized, 19-inch rack, follow the instructions described below:

1. Check the efficiency of the grounding system and the stability of the rack.

2. Secure the supplied rack-mounting brackets to each side of the device with supplied screws, as illustrated in the following figure.

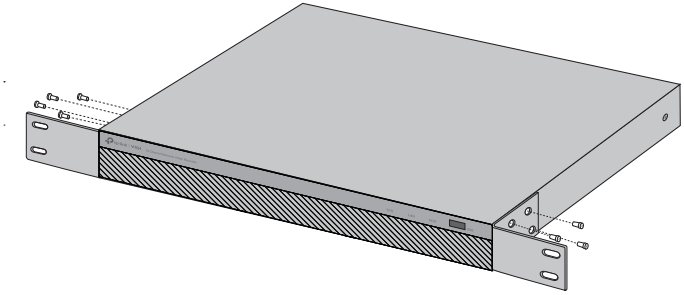

3. After the brackets are attached to the device, use suitable screws (not provided) to secure the brackets to the rack, as illustrated in the following figure.

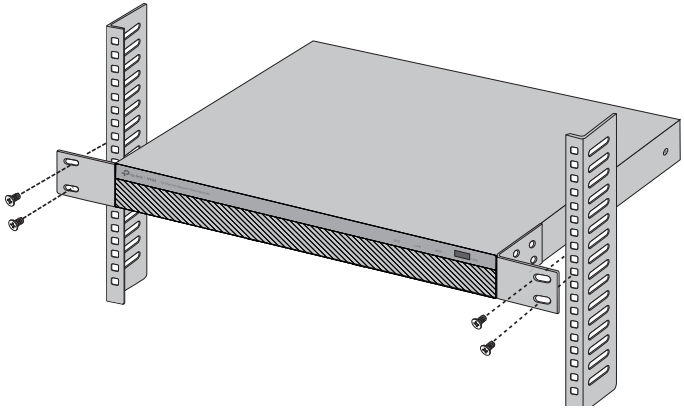

# Chapter 3 Hardware Connection

Follow the steps below to complete the hardware connection.

*Only PoE NVRs have PoE ports to power PoE IPCs.

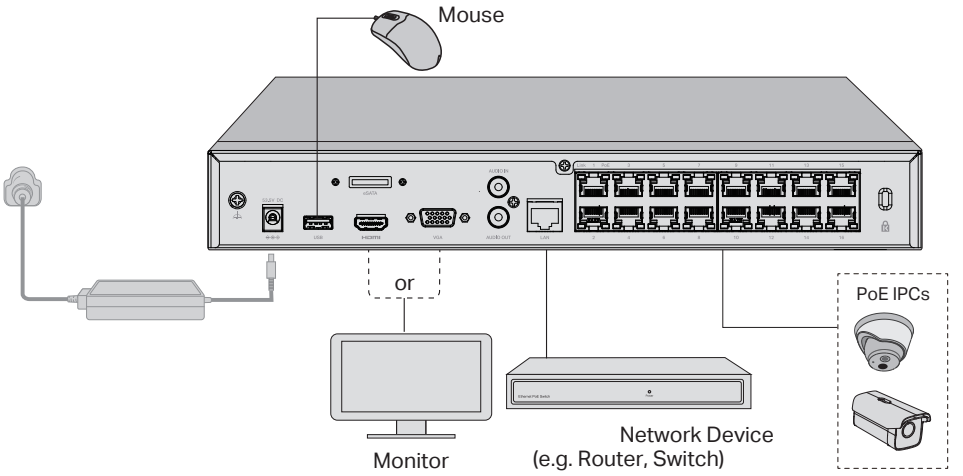


1. Connect your monitor to the HDMI or VGA port according to the connection port it supports.
2. Connect your monitor to a power source and turn it on.
3. Connect the LAN port of the NVR to a network device with an Ethernet cable.
4. Connect the provided USB Mouse to the USB Interface of the NVR.

**Note:**

- If you want to turn off the NVR after installing the hard drive, right click on the Live View screen and click the Power button on Main Menu of your monitor. Do not unplug it directly.
- The input voltage should match the power requirements of the NVR.
- The buzzer on the NVR may be triggered when no hard drive is installed or the hard drive in the NVR hasn't been initialized. You can turn it off in Event-Exception Detection-Disk Exception.

# Chapter 4 Configuration

NVR can add and manage cameras in batches.

* Here we use TP-Link cameras as an example. For other camera brands, please refer to their User Manuals to add the cameras.

**Step 1. Connect your cameras to the same network as your NVR.**

**Step 2. Follow the instructions to finish quick setup.**

1. Create a login password for the NVR and a preset password for your unset cameras.

   Note: Enter an email address for resetting the password of NVR or cameras.

2. Click Next to automatically initialize the NVR, and the NVR will automatically find and add the cameras in your network.

   Note: If you want to add cameras manually, click Step-by-step Setup and follow the wizard to add cameras in your network and complete the setup.

**Step 3. Right click on the Live View screen to open the Main Menu for management.**

**(Optional) Step 4. Bind your NVR to a TP-Link ID for remote access and management.**

1. Right click on the Live View screen and click Settings.

2. Click Cloud Services on the top, enter your TP-Link ID and password, and click Bind.

**Note:**
Make sure your NVR can get access to the internet before binding.
- If you don't have a TP-Link ID, sign up first.
- If your NVR fails to connect to the internet, please refer to FAQ-Q3.
- For more instructions, please refer to the NVR's User Guide.

If you want to add a camera after Quick Setup, please follow the steps below:

1. Right click on the Live View screen and click Add Camera.
2. Select a camera and click + to add your camera directly. If you have disabled Plug and Play on your NVR, please create a password or use the preset password for your unset camera.

**Note:**
- The password preset for cameras in Quick Setup will be applied to your unset cameras.
- If your cameras have been activated, use the previous passwords to add and manage the cameras.
- If you can't find your camera, refer to FAQ-Q2.

## More Management Methods

You can add and manage your devices via any of the methods below.

- **Method 1: Via the TP-Link VIGI App**

Remotely view live video, manage NVR, and get instant alerts.

1. Download and install the latest TP-Link VIGI app.

Download on the App Store
GET IT ON Google Play
or

2. Open the app and log in with your TP-Link ID. If you don't have an account, sign up first.
3. Tap the + button on the top right and follow the app instructions to add your NVR.

- **Method 2: Via a Web Browser**

View live video and modify NVR settings via a web browser.

1. Find the NVR's IP address on your router's client page.
2. On your local computer, open a web browser and enter https://NVR's IP address (https://192.168.0.240 by default).
3. Select your Country/Region and Time Zone.

4. Set a password to activate the NVR.

Done. You can manage and change NVR settings, and add cameras on the web manag ement page.

# Appendix FAQ

**Q1. What should I do if I forget the login password of my NVR?**

1. Click Forgot Password on the login page and then follow the instructions to reset the password.
2. Remove the cover, then press and hold the Reset button inside the NVR for over 3 seconds. The NVR will restore to the factory settings. Then follow quick setup to create a login password.

**Q2. What can I do if no cameras are found?**

1. Refresh to discover your cameras again.
2. Make sure the cameras are powered on.
3. Make sure your cameras and NVR or computer are in the same network.
4. Try to add your cameras manually.

**Q3. What can I do if my NVR fails to connect to the Internet??**

1. Check if the internet is working properly.
2. Make sure your NVR is in the same network segment as your network devices, or select Auto as the mode to configure the NVR to obtain a dynamic IP address. For more details, please refer to the NVR's User Guide.

If you have more questions, please visit https://www.tp-link.com/support/faq/2850/.

## Safety Information

This device is restricted to indoor use only.

- Keep the device away from water, fire, humidity or hot environments.
- Do not attempt to disassemble, repair, or modify the device.
- Do not use damaged charger or USB cable to charge the device.
- Do not use any other chargers than those recommended.
- Adapter shall be installed near the equipment and shall be easily accessible.
- Use only power supplies which are provided by manufacturer and in the original packing of this product. If you have any questions, please don't hesitate to contact us.
- Avoid disposal of a battery into fire or a hot oven, or mechanically crushing or cutting of a battery, that can result in an explosion.
- Place the device with its bottom surface downward. Install it at stable places, and prevent it from falling.
- The plug on the power supply cord is used as the disconnect device the socket-outlet shall be easily accessible.
- The power adapter must be used indoors. Make sure that the temperature of the power adapter is within 0-40°C.

This equipment is not suitable for use in locations where children are likely to be present, such as family environment, school, children's playground and so on.

CAUTION!

Risk of explosion if the battery is replaced by an incorrect type.

CAUTION!

Avoid replacement of a battery with an incorrect type that can defeat a safeguard.

Avoid disposal of a battery into fire or a hot oven, or mechanically crushing or cutting of a battery, that can result in an explosion.

Do not leave a battery in an extremely high temperature surrounding environment that can result in an explosion or the leakage of flammable liquid or gas.

Do not leave a battery subjected to extremely low air pressure that may result in an explosion or the leakage of flammable liquid or gas.

CAUTION: Do not ingest battery,Chemical Burn Hazard

This product contains a coin/button cell battery. If the coin/button cell battery is swallowed, it can cause severe internal burns in just 2 hours and can lead to death.

Keep new and used batteries away from children.

If the battery compartment does not close securely, stop using the product and keep it away from children.

If you think batteries might have been swallowed or placed inside any part of the body,seek immediate medical attention.

*Some devices may be incompatible, such as wireless mouse.

Please read and follow the above safety information when operating the device. We cannot guarantee that no accidents or damage will occur due to improper use of the device. Please use this product with care and operate at your own risk.

# EU Declaration of Conformity

**For VIGI NVR2016H**

TP-Link hereby declares that the device is in compliance with the essential requirements and other relevant provisions of directives 2014/30/EU, 2014/35/EU, 2009/125/EC, 2011/65/EU and (EU)2015/863.
The original EU Declaration of Conformity may be found at
https://www.tp-link.com/en/support/ce/

**For other models**

TP-Link hereby declares that the device is in compliance with the essential requirements and other relevant provisions of directives 2014/30/EU, 2014/35/EU, 2011/65/EU and (EU)2015/863.
The original EU Declaration of Conformity may be found at

https://www.tp-link.com/en/support/ce/

# UK Declaration of Conformity

TP-Link hereby declares that the device is in compliance with the essential requirements and other relevant provisions of the Electromagnetic Compatibility Regulations 2016 and Electrical Equipment (Safety) Regulations 2016.

The original UK Declaration of Conformity may be found at https://www.tp-link.com/support/ukca/

HIGH-DEFINITION MULTIMEDIA INTERFACE

The terms HDMI, HDMI High-Definition Multimedia Interface, HDMI trade dress and the HDMI Logos are trademarks or registered trademarks of HDMI Licensing Administrator, Inc.

To ask questions, find answers, and communicate with TP-Link users or engineers, please visit **https://community.tp-link.com** to join TP-Link Community.

For technical support, the user guide and other information, please visit **https://www.tp-link.com/support**, or simply scan the QR code.

© 2024 TP-Link 7106511700 REV1.2.0