Installation Guide

5/8-Port 2.5G Multi-Gigabit Desktop Switch

LiteWave LS1005G-M2/LS1008G-M2

LED Explanation

Power

On: Power on
Off: Power off

Link/Act

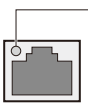

Green On:
Running at 2.5 Gbps, but no activity.
Green Flashing:
Running at 2.5 Gbps and transmitting or receiving data.
Yellow On:
Running at 1000/100 Mbps, but no activity.
Yellow Flashing:
Running at 1000/100 Mbps and transmitting or receiving data.
Off:
No device is linked to the corresponding port.

Note: For simplicity, we will take LS1008G-M2 for example throughout this Guide.

Connection

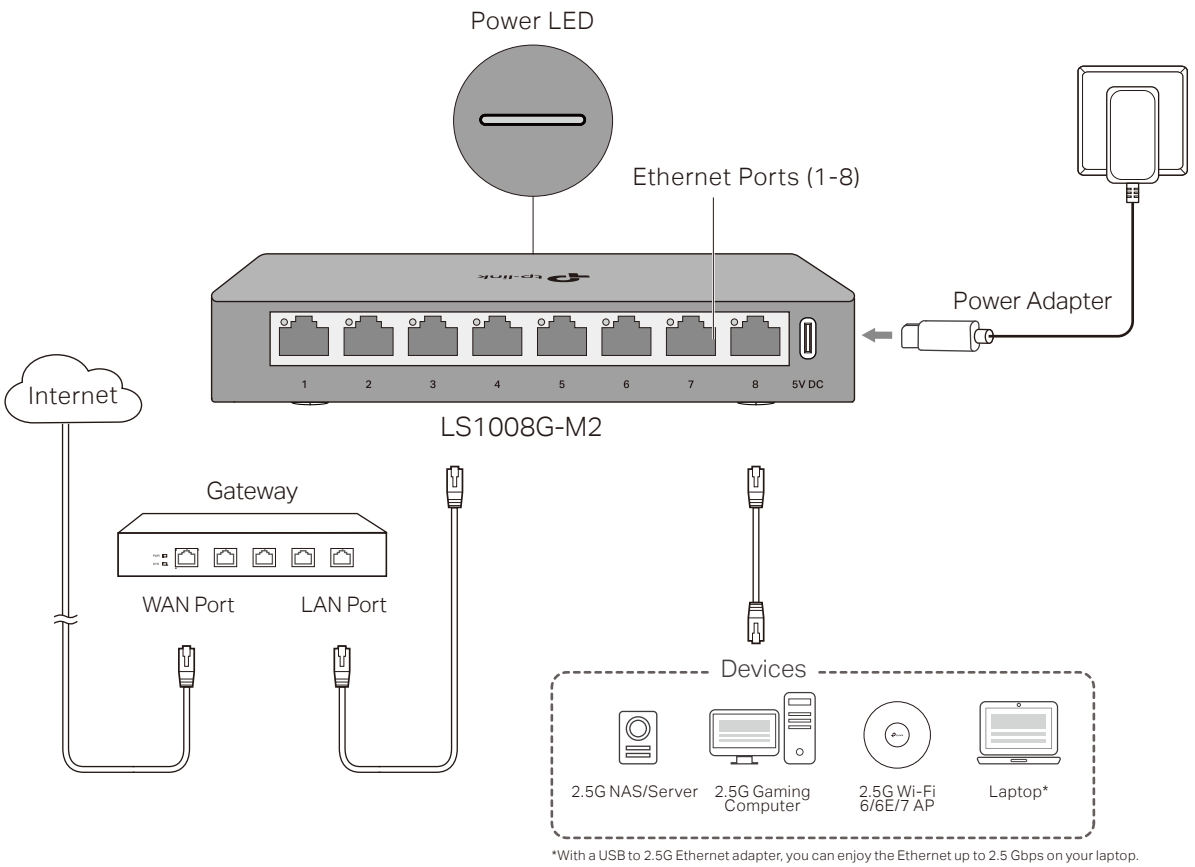

*With a USB to 2.5G Ethernet adapter, you can enjoy the Ethernet up to 2.5 Gbps on your laptop.

© 2026 TP-Link
7100003632 REV1.0.0

Frequently Asked Questions (FAQ)

Q1. The Power LED is not lit.

The Power LED should be lit when the power system is working normally. If the Power LED is not lit, check as follows:

A1: Make sure the power adapter is connected to the switch with power source properly.

A2: Make sure the voltage of the power supply meets the requirements of the input voltage of the switch.

A3: Make sure the power source is ON.

Q2. The Link/Act LED is not lit when a device is connected to the corresponding port.

It is recommended that you check the following items:

A1: Make sure that the cable connectors are firmly plugged into the switch and the device.

A2: Make sure the connected device is turned on and works normally.

A3: The cable must be less than 100 meters long (328 feet).

Specifications

General Specifications

Standard	IEEE802.3, IEEE802.3u, IEEE802.3ab, IEEE802.3bz, IEEE802.3x, IEEE802.1p
Protocol	CSMA/CD
Data Transfer Rate	Fast Ethernet: 100Mbps (Half Duplex), 200Mbps (Full Duplex) Gigabit Ethernet: 2000Mbps (Full Duplex) 2.5 Gigabit Ethernet: 5000Mbps (Full Duplex)
Network Media (Cable)	100Base-TX: 2-pair UTP category 5 cable or above (maximum 100m) EIA/TIA-568 100Ω STP (maximum 100m) 1000Base-T: 4-pair UTP category 5e cable or above (maximum 100m) EIA/TIA-568 100Ω STP (maximum 100m) 2.5GBase-T: 4-pair UTP category 5e cable or above (maximum 100m) EIA/TIA-568 100Ω STP (maximum 100m)
Interface	5/8 100 Mbps/1 Gbps/2.5 Gbps Auto-Negotiation RJ45 Ports
Switching Capacity	LS1005G-M2: 25 Gbps LS1008G-M2: 40 Gbps
LED Indicators	Power, Link/Act
Transfer Method	Store-and-Forward
MAC Address Learning	Automatically learning, automatically aging
Frame Forward Rate	100Base-TX: 148810pps/Port 1000Base-T: 1488095pps/Port 2.5GBase-T: 3720238pps/Port
Wall Mountable	Yes
Distance Between Mounting Holes	LS1005G-M2: 62 mm LS1008G-M2: 102 mm

Environmental and Physical Specifications

Operating Temperature	-5˚C to 40˚C (23˚F to 104˚F)
Storage Temperature	-40˚C to 70˚C (-40˚F to 158˚F)
Operating Humidity	10% to 90%RH non-condensing
Storage Humidity	5% to 90%RH non-condensing

For technical support and other information, please visit **https://www.tp-link.com/support/?type=smb**, or simply scan the QR code.

TP-Link hereby declares that the switch is in compliance with the essential requirements and other relevant provisions of directives 2014/30/EU, 2014/35/EU, 2009/125/EC, 2011/65/EU and (EU)2015/863.

The original EU declaration of conformity may be found at https://www.tp-link.com/en/support/ce/

TP-Link hereby declares that the switch is in compliance with the essential requirements and other relevant provisions of the Electromagnetic Compatibility Regulations 2016 and Electrical Equipment (Safety) Regulations 2016.

The original UK declaration of conformity may be found at https://www.tp-link.com/support/ukca/

Safety Information

- Keep the device away from water, fire, humidity or hot environments.
- Do not attempt to disassemble, repair, or modify the device. If you need service, please contact us.
- Do not use damaged charger or USB cable to charge the device.
- Do not use any other chargers than those recommended.
- Adapter shall be installed near the equipment and shall be easily accessible.
- For applicable power supplies see user instructions. Refer to the user instructions on the product support page.

Please read and follow the above safety information when operating the device. We cannot guarantee that no accidents or damage will occur due to improper use of the device. Please use this product with care and operate at your own risk.

FCC Compliance Information Statement

Product Name: Switch

Model Number: LS1005G-M2/LS1008G-M2

Component Name	Model
Power Adapter	AD-D00605001 00US01 AD-D00705002 00US01

Responsible party:

TP-Link Systems Inc.

10 Mauchly, Irvine, CA 92618

Website: https://www.tp-link.com/us/

Tel: +1 626 333 0234

Fax: +1 909 527 6804

E-mail: sales.usa@tp-link.com

This equipment has been tested and found to comply with the limits for a Class B digital device, pursuant to part 15 of the FCC Rules. These limits are designed to provide reasonable protection against harmful interference in a residential installation. This equipment generates, uses and can radiate radio frequency energy and, if not installed and used in accordance with the instructions, may cause harmful interference to radio communications. However, there is no guarantee that interference will not occur in a particular installation. If this equipment does cause harmful interference to radio or television reception, which can be determined by turning the equipment off and on, the user is encouraged to try to correct the interference by one or more of the following measures:

- Reorient or relocate the receiving antenna.
- Increase the separation between the equipment and receiver.
- Connect the equipment into an outlet on a circuit different from that to which the receiver is connected.
- Consult the dealer or an experienced radio/ TV technician for help.

This device complies with part 15 of the FCC Rules. Operation is subject to the following two conditions:

1) This device may not cause harmful interference.

2) This device must accept any interference received, including interference that may cause undesired operation.

Any changes or modifications not expressly approved by the party responsible for compliance could void the user's authority to operate the equipment.

Product Name: Power Adapter

Model Number: L

Responsible party:

TP-Link Systems Inc.

10 Mauchly, Irvine, CA 92618

Website: https://www.tp-link.com/us/

Tel: +1 626 333 0234

Fax: +1 909 527 6804

E-mail: sales.usa@tp-link.com

This equipment has been tested and found to comply with the limits for a Class B digital device, pursuant to part 15 of the FCC Rules. These limits are designed to provide reasonable protection against harmful interference in a residential installation. This equipment generates, uses and can radiate radio frequency energy and, if not installed and used in accordance with the instructions, may cause harmful interference to radio communications. However, there is no guarantee that interference will not occur in a particular installation. If this equipment does cause harmful interference to radio or television reception, which can be determined by turning the equipment off and on, the user is encouraged to try to correct the interference by one or more of the following measures:

- Reorient or relocate the receiving antenna.
- Increase the separation between the equipment and receiver.
- Connect the equipment into an outlet on a circuit different from that to which the receiver is connected.
- Consult the dealer or an experienced radio/ TV technician for help.

This device complies with part 15 of the FCC Rules. Operation is subject to the following two conditions:

1) This device may not cause harmful interference.

2) This device must accept any interference received, including interference that may cause undesired operation.

Any changes or modifications not expressly approved by the party responsible for compliance could void the user's authority to operate the equipment.

We, **TP-Link Systems Inc.**, has determined that the equipment shown as above has been shown to comply with the applicable technical standards, FCC part 15. There is no unauthorized change is made in the equipment and the equipment is properly maintained and operated.

Issue Date: 2026/09/16

Industry Canada Statement

CAN ICES-003 (B)/NMB-003(B)

CE Mark Warning

Продукт сертифіковано згідно с правилами системи УкрСЕПРО на відповідність вимогам нормативних документів та вимогам, що передбачені чинними законодавчими актами України.

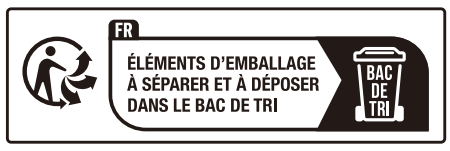



BSMI Notice

安全諮詢及注意事項

- 請使用原裝電源供應器或只能按照本產品注明的電源類型使用本產品。
- 清潔本產品之前請先拔掉電源線。請勿使用液體、噴霧清潔劑或濕布進行清潔。
- 注意防潮，請勿將水或其他液體潑灑到本產品上。
- 插槽與開口供通風使用，以確保本產品的操作可靠並防止過熱，請勿堵塞或覆蓋開口。
- 請勿將本產品置放於靠近熱源的地方。除非有正常的通風，否則不可放在密閉位置中。
- 請不要私自拆開機殼或自行維修，如產品有故障請與原廠或代理商聯繫。

警告：為避免電磁干擾，本產品不應安裝或使用於住宅環境。

限用物質含有情況標示聲明書

單元 Unit	限用物質及其化學符號					
	鉛 Lead (Pb)	汞 Mercury (Hg)	鎘 Cadmium (Cd)	六價鉻 Hexavalent chromium (Cr^{+6})	多溴聯苯 Polybrominated biphenyls (PBB)	多溴二苯醚 Polybrominated diphenyl ethers (PBDE)
PCB	○	○	○	○	○	○
外殼	○	○	○	○	○	○
電源供應器	-	○	○	○	○	○
其他及其配件	-	○	○	○	○	○

備考1.〝超出0.1 wt %〞及〝超出0.01 wt %〞係指限用物質之百分比含量超出百分比含量基準值

Note 1: "Exceeding 0.1 wt %" and "exceeding 0.01 wt %" indicate that the percentage content of the restricted substance exceeds the reference percentage value of presence condition.

備考2.〝○〞係指該項限用物質之百分比含量未超出百分比含量基準值。

Note 2: "○" indicates that the percentage content of the restricted substance does not exceed the percentage of reference value of presence.

備考3.〝—〞係指該項限用物質為排除項目。

Note 3: The "—" indicates that the restricted substance corresponds to the exemption.

Wall Mounting Specifications
嵌牆安裝規格

Model 型號	Screw Standard of ANSI B1.1 ANSI B1.1 的螺絲規格	Minimum Length of Screw 螺絲的最小長度	Screw-Head-to-Wall Minimum Distance 螺絲頭到牆壁最短距離	Wall-Mounting-Holes Distance 壁掛孔距離
LS1005G-M2	4#, (5#), 6#, 8#	8.5 mm	2.5 mm	62 mm
LS1008G-M2	4#, (5#), 6#, 8#	8.5 mm	2.5 mm	102 mm

For the EU countries, use only the power supply listed below:

Model	Power Adapter	Brand
LS1005G-M2	AD-D00605001 00EU01	TP-Link
LS1008G-M2	AD-D00705002 00EU01	TP-Link

ErP Info

LS1005G-M2:

- Power consumption in networked standby: 1.9 W
- Power consumption in networked standby when all wired network ports are connected: 5.8 W
- The default period of time after which the power management function switches the equipment automatically into a condition providing networked standby: 20 minutes

LS1008G-M2:

- Power consumption in networked standby: 2.5 W
- Power consumption in networked standby when all wired network ports are connected: 7.3 W
- The default period of time after which the power management function switches the equipment automatically into a condition providing networked standby: 20 minutes

Explanation of the symbols on the product label
產品標籤上符號的解釋

Note: The product label can be found at the bottom of the product and its I.T.E. power supply. Symbols may vary from products.

注意：產品標籤可以在產品底部和其I.T.E. 電源供應

Symbol 符號	Explanation 說明
	Class II equipment 二級設備
	Class II equipment with functional earthing 具有接地功能的二級設備
	Alternating current 交流電
	Direct current 直流電
	Polarity of d.c. power connector 輸出端點的極性
	For indoor use only 僅供室內使用
	Dangerous voltage 危險電壓
	Caution, risk of electric shock 請注意，有觸電的危險
VI	Energy efficiency Marking 能源效率標誌
	Protective earth 保護接地
	Earth 接地
	Frame or chassis 框架或外殼
	Functional earthing 功能接地
	Caution, hot surface 請注意，表面過熱
	Caution 警告
	Operator's manual 操作手冊
	Stand by 待機
	"ON"/"OFF" (push- push) "開啟"/"關閉" (按壓式)
	Fuse 保險絲
N	Fuse is used in neutral N 保險絲用於中性線N
	RECYCLING 回收 This product bears the selective sorting symbol for Waste electrical and electronic equipment (WEEE). This means that this product must be handled pursuant to European directive 2012/19/EU in order to be recycled or dismantled to minimize its impact on the environment. 這個產品帶有歐盟指令2012/19/EU 中關於廢棄電氣電子設備（WEEE）的選擇性分類標誌。這意味著，該產品必須按照該指令處理，以便進行回收或拆解，從而最大限度地減少對環境的影響。 User has the choice to give his product to a competent recycling organization or to the retailer when he buys a new electrical or electronic equipment. 用戶可以選擇將產品交給有資格的回收機構，或在購買新的電器或電子設備時將其交給零售商進行回收。
	Caution, avoid listening at high volume levels for long periods 請小心，避免長時間以高音量收聽。
	Disconnection, all power plugs 斷線，所有電源插頭
m	Switch of mini_gap construction 迷你間隙結構開關
μ	Switch of micro- gap construction (for US version) Switch of micro-gap /micro disconnection construction (for other versions except US) 小間隙結構開關（US 版本） 小間隙/ 小斷開結構的開關（非US 版）
ε	Switch without contact gap (Semiconductor switching device) 無接觸間隙的開關（半導體開關設備）