VIGI by tp-link

Datasheet
Security Never Shuts Down

Outdoor Full-Color
Bullet Network Camera

MODEL: EasyCam C320



2MP | H.265+

Human & Vehicle Classification | Smart Detection | LightPro Night Vision | IP67 Weatherproofing

LightPro Night Vision Technology

Intelligently switches between IR and full-color night vision by detecting people or vehicles, effectively minimizing light pollution and conserving energy.

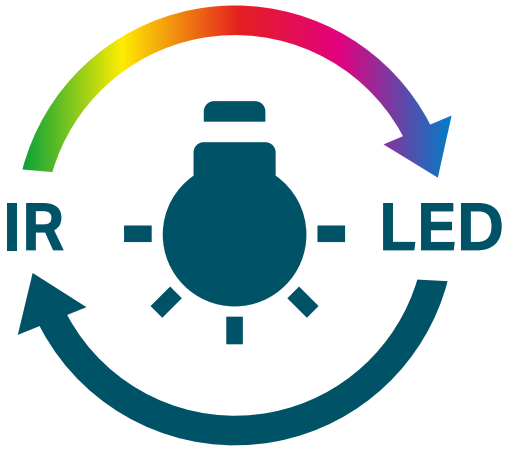

Human & Vehicle Classification

Intelligently distinguishes humans and vehicles from other objects, so you receive more accurate event notifications.



Smart Detection

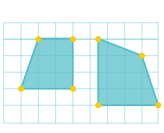

Intrusion Detection

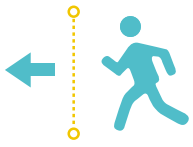

Line-Crossing Detection



Region Entering Detection



Region Exiting Detection

VIGI Surveillance Solution

The VIGI professional surveillance system by TP-Link is dedicated to protecting the business that you've worked hard to build—whenever, wherever.

Outstanding functions, reliable quality guarantees, and simplified installation work together to ensure your business stays safe and sound.

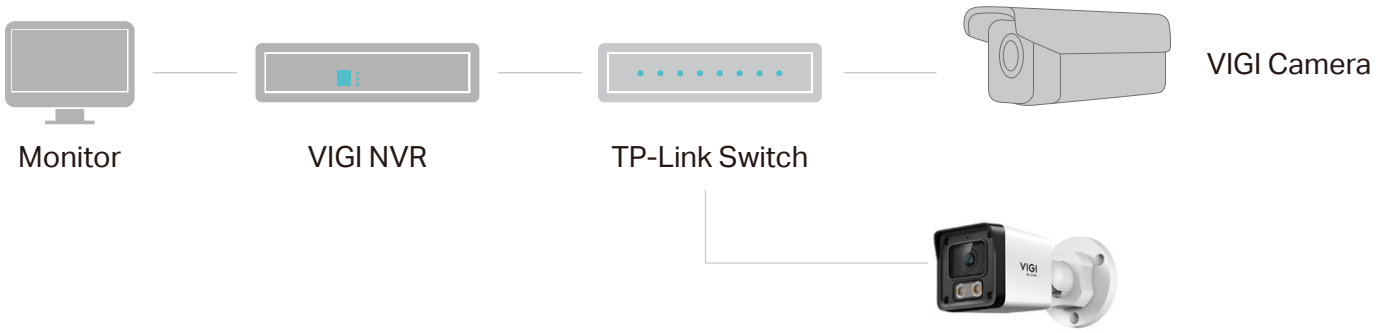

Flexible Installation

Find the perfect vantage point by simply securing your camera to the ceiling, wall, or pole.*

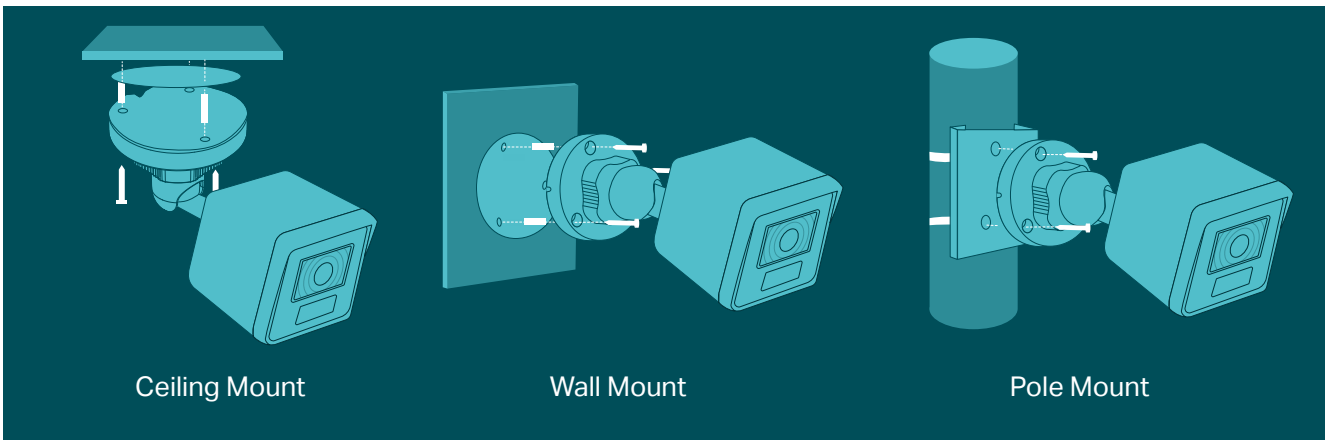

Build Features





*The pole mounting kits are not included in the package.

Specifications

Camera	
Product Model	EasyCam C320
Image Sensor	1/3" Progressive Scan CMOS
Shutter Speed	1/3 to 1/10000 s
Slow Shutter	Yes
Min. Illumination	0.2 Lux; 0 Lux with IR/White light
Day/Night Mechanism	IR Cut Filter
Day/Night Switch	Unified/ Scheduled/ Auto
Lens	
Type	Fixed Focal Lens
Focal Length	2.8/4/6 mm
Aperture	F2.0
FOV	• 2.8 mm: Horizontal FOV: 98.8°, Vertical FOV: 53.5°, Diagonal FOV: 117° • 4 mm: Horizontal FOV: 75.2°, Vertical FOV: 40.8°, Diagonal FOV: 88.3° • 6 mm: Horizontal FOV: 49.8.7°, Vertical FOV: 27.6°, Diagonal FOV: 57.7°
Lens Mount	M12*P 0.5

DORI Distance	• 2.8 mm Detect: 16.4 ft (5 m) Observe: 29.5 ft (9 m) Recognize: 62.3 ft (19 m) Identify: 154.2 ft (47 m) • 4 mm Detect: 193.6 ft (59 m) Observe: 82 ft (25 m) Recognize: 39.4 ft (12 m) Identify: 19.7 ft (6 m) • 6 mm Detect: 292 ft (89 m) Observe: 121.4 ft (37 m) Recognize: 59.1 ft (18 m) Identify: 29.5 ft (9 m)
Angle Adjustment (Manual)	
Range	Pan: 0° to 360°, Tilt: 0° to 90°, Rotation: 0° to 360°
Illuminator	
IR LED	• Quantity: 2 • IR Range: 98 ft (30 m) • White LED Range: 98 ft (30 m) • IR Wavelength: 850 nm
Illuminator On/Off Control	Auto/Scheduled/Always on/Always off
Video	
Max. Resolution	1920x1080
Main Stream	• Frame Rate: 50Hz: 1fps, 5fps, 10fps, 15fps, 20fps, 25fps 60Hz: 1fps, 5fps, 10fps, 15fps, 20fps, 25fps, 30fps • Resolution: 1920x1080, 1280x960, 1280x720 Note: If the image rotation is set to 90°, the frame rate only supports up to 20fps.

Sub-Stream	• Frame Rate: 50Hz: 1fps, 5fps, 10fps, 15fps, 20fps, 25fps 60Hz: 1fps, 5fps, 10fps, 15fps, 20fps, 25fps, 30fps • Resolution: 848x480, 704x576, 640x480, 640x360, 352x288, 320x240 Note: If the image rotation is set to 90°, the frame rate only supports up to 20fps.
Bit Rate Control	CBR, VBR
Video Compression	• Main Stream: H.265+/H.265/H.264+/H.264 • Sub-Stream: H.265/H.264
H.264 Type	High Profile
H.264+	Main Stream Supported
H.265 Type	Main Profile
H.265+	Main Stream Supported
Video Bit Rate	• Main Stream: 256 Kbps to 4 Mbps • Sub-Stream: 64 Kbps to 512 Kbps
Image	
Image Settings	• Mirror • Brightness • Contrast • Saturation • Sharpness • Exposure • WDR • White Balance • Prevent Overexposure to Infrared Light • HLC Adjustable by Client Software
Image Enhancement	BLC/3D DNR/HLC/SmartIR
Wide Dynamic Range	DWDR
SNR	≥ 52 dB
Image Parameters Switch	Yes
Privacy Mask	Up to 4 Masks
ROI	1 Region

OSD Setting	Yes
Audio	
Audio Communication	N/A
Audio Input	Yes (Built-in Microphone)
Audio Output	N/A
Audio Compression	N/A
Audio Sampling Rate	8KHz
Environment Noise Filtering	Yes
Audio Bit Rate	64 Kbps (G.711 alaw)
Network	
Protocols	TCP/IP, UDP, ICMP, HTTP, HTTPS, DHCP, DNS, RTSP, NTP, UPnP UDP, SSL/TLS
ONVIF	Yes
API	ONVIF Profile S/T
Simultaneous Live View	3 Main Streams & 3 Sub-Streams
Client	VIGI App, Web UI, VIGI VMS, VIGI Cloud VMS, VIGI Config Tool
Web Browser	• Google Chrome® 57 and above • Firefox® 52 and above • Safari® 11 and above • Microsoft® Edge 91 and above
Cloud	Yes
Security	Password Protection, HTTPS Encryption, IP Address Filter, Digest Authentication
Alarm and Event Management	
Smart Event	• Intrusion Detection • Line-Crossing Detection • Region Entering Detection • Region Exiting Detection • People Detection • Vehicle Detection

Basic Event	• Motion Detection (Enhanced with Human & Vehicle Classification for more accurate alerts) • Video Tampering Detection • Exception (Illegal Login)
Alarm Linkage	• Sending Email • Send to Alarm Server • Upload to FTP • Message Push
Deep Learning Function	
People & Vehicle Analytics	N/A
Interface	
Network Interface	1 RJ45 10/100M Self-Adaptive Ethernet Port, PoE
On-board Storage	N/A
Built-in Speaker	N/A
Built-in Microphone	Yes; Records Anything Going on within a 15 ft (4.6 m) Radius of the Camera
Audio	N/A
Alarm	N/A
Reset Button	N/A
Power	PoE Power Port
General	
Operating Temperature	-30 °C to 60 °C
Storage Temperature	-40 °C to 60 °C
Operating Humidity	95% or Less (Non-Condensing)
Storage Humidity	95% or Less (Non-Condensing)
Package Contents	• VIGI Network Camera • Quick Start Guide • Waterproof Cable Attachments • Mounting Accessories
Power Supply	PoE: 802.3af, class 0, Max. 7.1 W
Protection	IP67

Material	Plastic
Net Weight	0.13Kg
Product Dimensions	5.6 × 2.9 × 2.9 in (141 × 74 × 74 mm)
Certifications	CE, NTRA, KC, BSMI, IC, ROHS

Dimensions

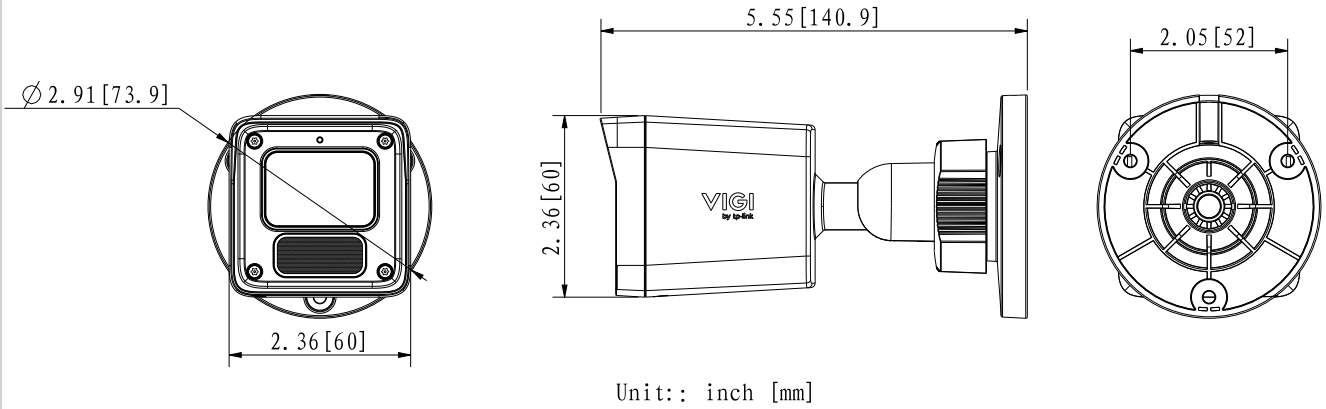

Unit:: inch [mm]

Specifications are subject to change without notice and can be found at www.vigi.com.

©2025 TP-Link