AC1200 Dual Band Wi-Fi Router

3in1:
Router,
Access Point,
Range Extender

Archer C50

Dual-Band Wi-Fi
867 Mbps + 300 Mbps†

Extensive Range
with Beamforming

IPTV and 4K TV
Supported

Multiple-Modes

Highlights

Fast Connections

Enjoy internet with the dual-band Wi-Fi and 4 fast LAN ports. Equipped with 4 omni-directional antennas, Archer C50 generates a 2.4 GHz Wi-Fi across your house and a fast 5 GHz Wi-Fi, letting the whole family enjoy reliable Wi-Fi on every device.

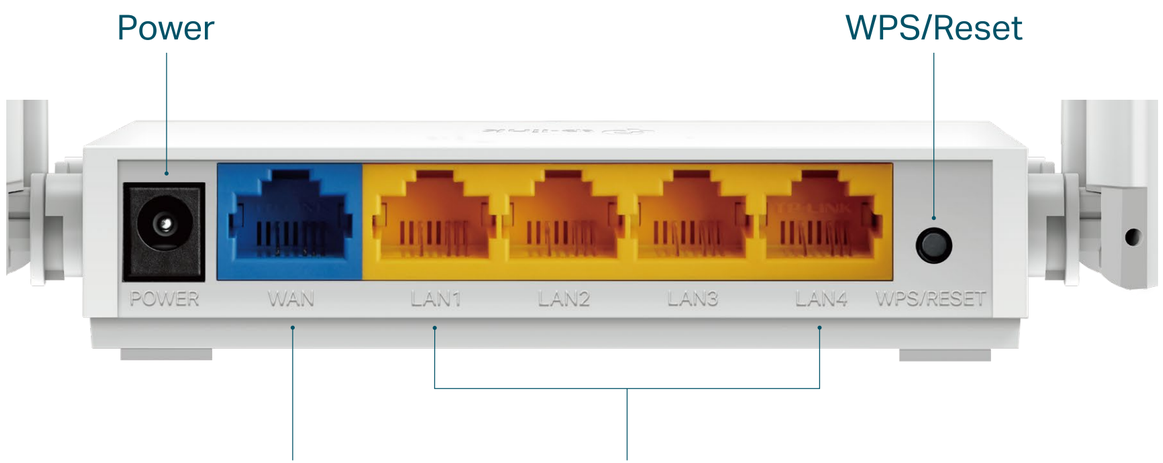

3 Modes in 1

Router Mode (Default)

Plug in an Ethernet cable to instantly create a private wireless network and share internet access with all your Wi-Fi devices.

Access Point Mode

Transform your existing wired network into a wireless one.

Range Extender Mode

Boost the existing wireless coverage in your house.

Highlights

Wi-Fi Speeds Ideal for 4K

867 Mbps on 5 GHz and 300 Mbps on 2.4 GHz are ideal for both everyday tasks and 4K streaming without buffering.†

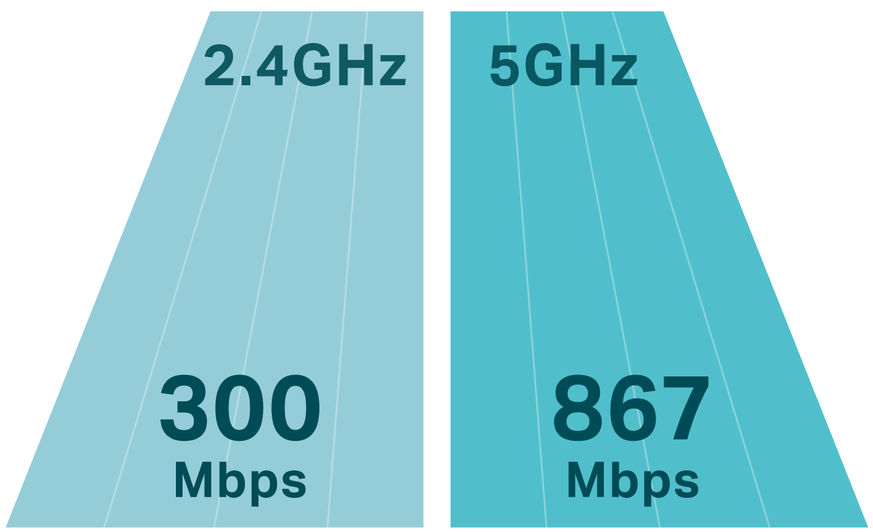

Beamforming

Beamforming detect the location of your connected devices and concentrates signals towards them to optimize wireless connections.

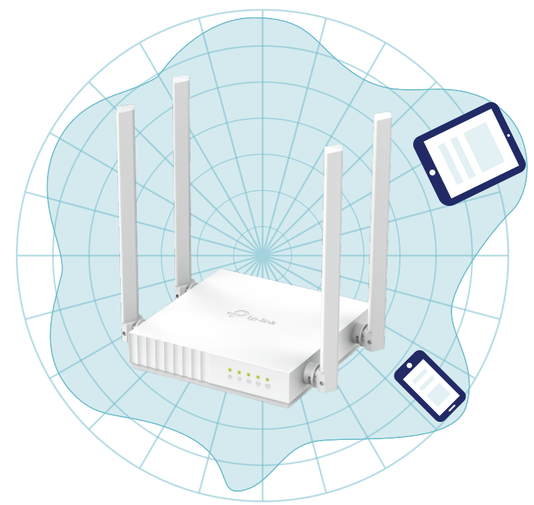

Archer C50

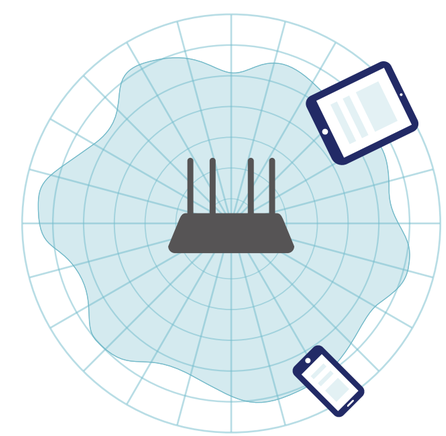

Regular Router

Highlights

MU-MIMO

MU-MIMO technology serves multiple devices at once, reducing wait time, and making each stream more efficient.‡

Traditional Router

MU-MIMO Router

Versatile Management

Block inappropriate content and set daily limits for the total time children/staff spend online through Parental Controls. Guest Network creates a separate access point for guests, to ensure your privacy is secure.

Features

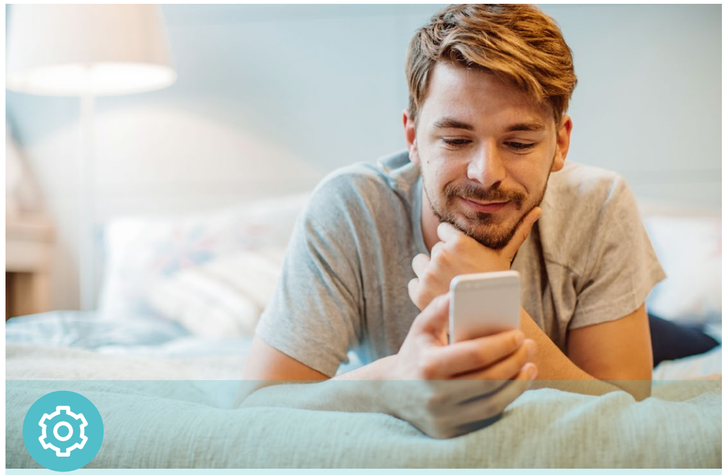

Ease of Use

- WPS – Make secure wireless connection quick and easy with the push of a button
- Compact and Mountable – Designed to conserve space and complement any décor.
- Intuitive Web UI – Ensure quick and simple installation without hassle
- Hassle-free Management with Tether App – Network management is made easy with the TP-Link Tether App, available on any Android or iOS device

Download on the App Store

GET IT ON Google Play

Reliability

- Ultimate Wireless Speed – 300 Mbps on 2.4 GHz and 867 Mbps on 5 GHz Wi-Fi speed for lag-free work
- 802.11ac – Backward compatible with 802.11b/g/n products
- IPTV – Support IGMP Proxy/Snooping, Bridge and Tag VLAN to optimize IPTV streaming
- QoS– Advanced QoS makes it easier for you to manage the bandwidth of connected devices
- IPV6 – Supports IPv6 to work with more ISPs

Security

- Guest Network – Provide separate access for guests while securing the home network
- Access Control – Establish a whitelist or blacklist to allow or block certain devices from accessing the internet
- Parental Controls – Manage when and how connected devices can access the internet
- Advanced WPA3 Encryptions – The latest WiFi security protocol, WPA3, brings new capabilities to improve cybersecurity in personal networks

Specifications

Hardware

- Ethernet Ports: 4 x 10/100Mbps LAN Ports, 1 x 10/100Mbps WAN Port
- Buttons: Reset/WPS Button
- Antennas: 4 Fixed Omni Directional Antennas
- External Power Supply: 9VDC/0.85A
- Dimensions (W x D x H): 4.5×4.2×1.0 in. (115×106.7×24.3 mm)

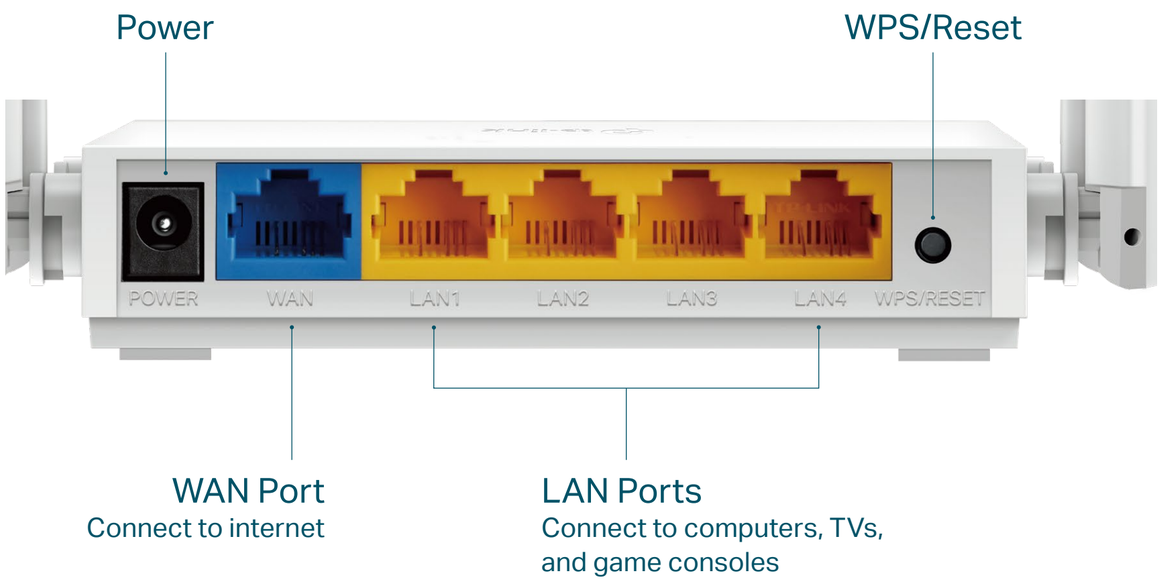

Wireless

- Wireless Standards: IEEE 802.11ac/n/a 5GHz, IEEE 802.11b/g/n 2.4GHz
- Frequency: 2.4GHz and 5GHz
- Signal Rate:

  5 GHz: Up to 867 Mbps

  2.4 GHz: Up to 300 Mbps
- Reception Sensitivity:

  5GHz:

  11a 54M: -76dBm; 11ac VHT20 MCS8: -70dBm;

  11ac VHT40 MCS9: -65.5dBm; 11ac VHT80 MCS9: -61.5dBm

  2.4GHz:

  11g 54M: -76dBm11n; HT20 MCS7: -74dBm;

  11n HT40 MCS7: -71dBm
- Wireless Function: Enable/Disable Wireless Radio, WMM
- Wireless Security: WPA, WPA2, WPA3, WPA / WPA2-Enterprise (802.1x)

Specifications

Software

- Operation Modes: Wireless Router, Range Extender, Access Point
- WAN Type: Dynamic IP, Static IP, PPPoE, PPTP(Dual Access), L2TP(Dual Access)
- DHCP: DHCP Server, DHCP Client List, Address Reservation
- Quality of Service: Device Prioritization
- NAT Forwarding: Port Forwarding, Port Triggering, UPnP, DMZ
- Dynamic DNS: DynDns, NO-IP
- Firewall Security: SPI Firewall, IP and MAC Address Binding
- Protocols: IPv4, IPv6
- Management: Parental Controls, Access Control, Local Management, Remote Management
- Guest Network: 2.4 GHz Guest Network, 5 GHz Guest Network

Others

- Certification

  KC, FCC, CE, RoHS
- Requirements

  Internet Explorer, Firefox, Chrome, Safari, or other

  JavaScript-enabled browser

  *You are recommended to use the latest version

  Cable or DSL Modem

  Subscription with an internet service provider (for internet access)
- Environment

  Operating Temperature: 0℃~40℃ (32°F ~104°F)

  Storage Temperature: -40℃~60℃ (-40°F ~140°F)

  Operating Humidity: 10%~90% non-condensing

  Storage Humidity: 5%~90% non-condensing
- Package Contents

  Wireless Router Archer C50

  Power Adapter

  RJ-45 Ethernet Cable

  Quick Installation Guide

Specifications are subject to change without notice. TP-Link is a registered trademark of TP-Link Technologies Co., Ltd. Other brands and product names are trademarks or registered trademarks of their respective holders. No part of the specifications may be reproduced in any form or by any means or used to make any derivative such as translation, transformation, or adaptation without permission from TP-Link Technologies Co., Ltd. Copyright ©2020 TP-Link Technologies Co., Ltd. All rights reserved.

*Maximum wireless signal rates are the physical rates derived from IEEE Standard 802.11 specifications. Actual wireless data throughput and wireless coverage are not guaranteed and will vary as a result of network conditions, client limitations, and environmental factors, including building materials, obstacles, volume and density of traffic, and client location.