tp-link | Aginet

AX3000 Dual Band Wi-Fi 6 XPON Router

MODEL:XX535v



Overview

Compliant with the ITU-T G.984 GPON standards, XX535v supports maximum data rates of up to 2.488Gbps downstream and 1.244Gbps upstream. Along with a 10/100/1,000Mbps WAN/LAN port and 2 10/100/1,000Mbps LAN ports, users can enjoy high-speed XPON services and bandwidth-intensive multimedia applications—such as interactive gaming, streaming, and real-time video—much faster and easier than ever before.

802.11ax Technology

Create a seamless Wi-Fi network in your home with the revolutionary combination of OFDMA, MU-MIMO, and Beamforming technologies

Ultimate Wireless Speed

Combined wireless speeds of up to 574 Mbps (over 2.4 GHz) and 2402 Mbps (over 5 GHz)

Supports EasyMesh

Adopts EasyMesh technology, which has further improved and standardized Wi-Fi functions, such as Wi-Fi diagnostics, channel selection and traffic separation

Easy Remote Management

Supports Aginet APP, OMCI, TR-069, TR-098, and TR181.

Features

AX3000 Dual-Band Wi-Fi 6

2402 Mbps (5 GHz) +
574 Mbps (2.4 GHz)

VoIP Telephony

Support VoIP base functions

Full Gigabit Ports

1× GE WAN/LAN +
2× GE LAN ports

Network Topology

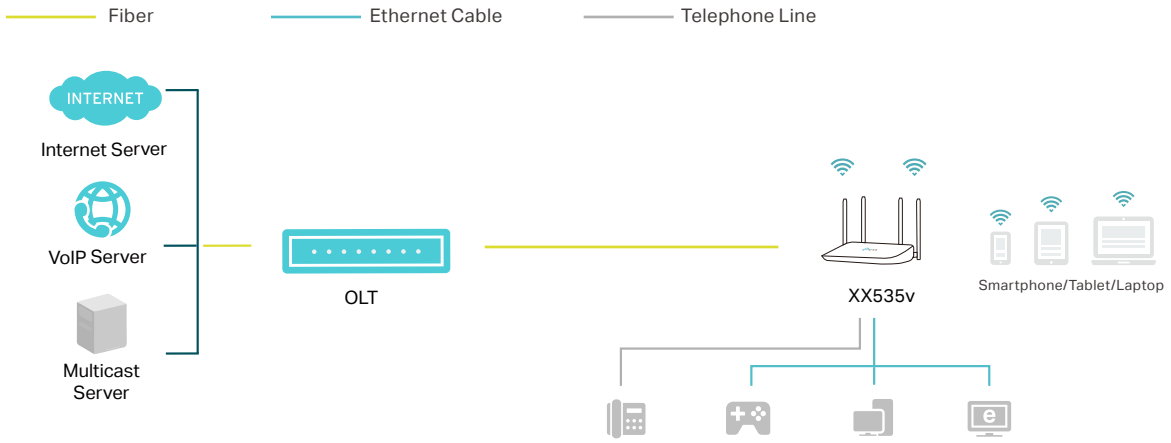

Hardware Description

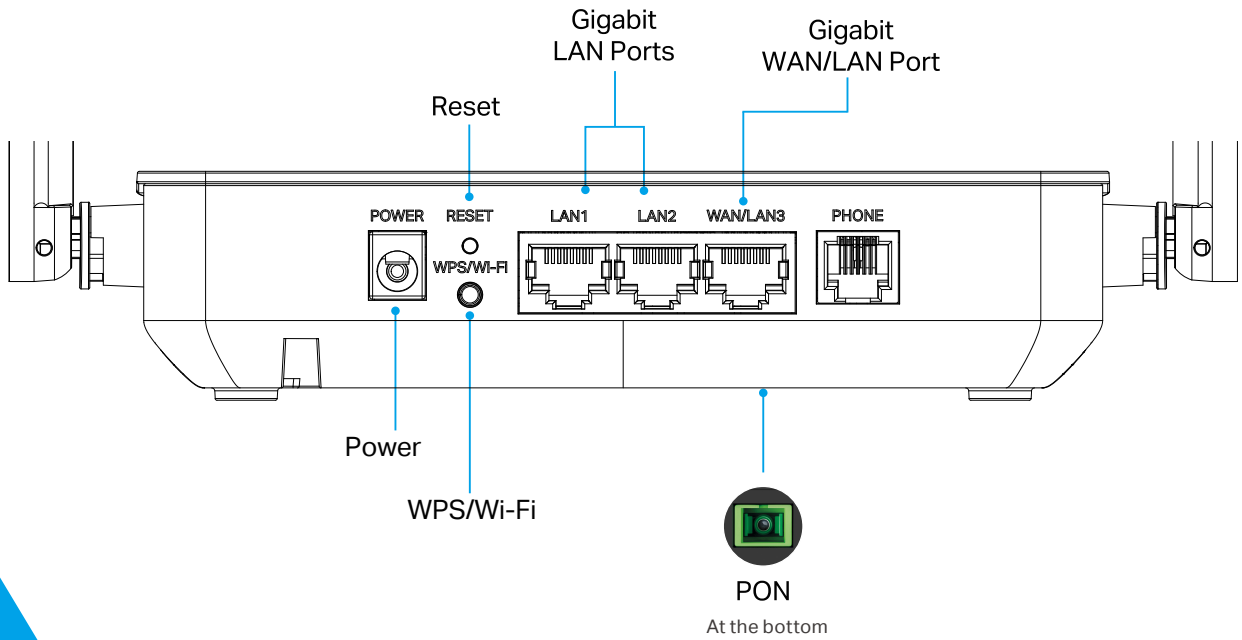

Specifications

Hardware

- Interface

  1× 10/100/1000 Mbps WAN/LAN Port,
  2× 10/100/1000 Mbps LAN Ports,
  1× FXS Port,
  1× SC/APC PON Port

- Button

  WPS/Wi-Fi Button, Reset Button

- External Power Supply

  12V/1.5A

- Dimensions (W * D * H)

  6.77 × 4.43 × 1.46 in (172 × 112.4 × 37 mm)

- Antenna

  2× High-Performance External Dual-Band Antennas and 1× Internal 5GHz Antenna

- MTBF

  >300,000 hours @ 25°C based on Telcordia SR-332 Issue 3

Wireless

- Wireless Standards

  IEEE 802.11a/n/ac/ax 5 GHz, IEEE 802.11b/g/n/ax 2.4 GHz

- Frequency

  2.4 GHz and 5 GHz

- Signal Rate

  2402 Mbps at 5 GHz, 574 Mbps at 2.4 GHz

- Wireless Function

  Enable/Disable Wireless Radio, Wireless Schedule, WMM, Wireless Statistics

- Mesh

  EasyMesh, IEEE 802.11k/v/r, Self-healing, Seamless Roaming

- Wireless Security

  No Security,WPA-PSK(TKIP)+WPA2-PSK(AES),W-PA2-PSK(AES),WPA2- PSK(AES)+WPA3-Personal,W-PA3-Personal,WPA2-Enterprise

- Wireless Schedule

  Support 2.4 GHz and 5 GHz Wireless Schedule

Others

- Certification

  CE

- Environment

  Operating Temperature: 0°C~40°C (32°F~104°F),
  Storage Temperature: -40°C~60°C (-40°F ~140°F)

- Package Contents

  AX3000 Dual-Band Wi-Fi 6 XPON Router XX535v
  Power Adapter
  RJ45 Ethernet Cable
  Quick Installation Guide

Software

- DHCP

  Server, DHCP Client List, Address Reservation

- Quality of Service

  Hardware QoS, Flow Classification

- Firewall Security

  DoS, IPv4 SPI Firewall, IPv6 Firewal, IP and MAC Address Binding, Access Control

- Dynamic DNS

  TP-Link, DynDns, NO-IP

- Protocols

  IPv4, IPv6

- Management

  Local Management, Remote Management, Aginet APP, TR069(TR-098/TR-181)

- Advanced Functions

  VoIP, Parental Controls, Port Forwarding, TX Beamforming, MU-MIMO, supports IGMP Proxy V1/V2/V3 and IGMP Snooping, Airtime Fairness, Band Steering, Multi-SSID, Wi-Fi Schedule

General Specifications

- GPON

  ITU G. 984 standard, Class B+
  2.488Gbps downstream/1.244Gbps upstream

- EPON

  1000BASE-PX20+ symmetric
  1.25Gbps downstream/upstream

- Wavelength

  1490nm downstream/1310nm upstream

- Receiving sensitivity

  GPON: -27dBm; EPON: -27dBm

- Saturated power

  GPON: -8dBm; EPON: -3dBm

- Transmitting power

  GPON: 0.5~5dBm; EPON:0~4dBm

- Transmitter

  DFB Laser

- Receiver

  PIN-TIA

- Distance

  0 ~ 20Km Max