VIGI by tp-link

Datasheet
Security Never Shuts Down

Solar System Controller

MODEL: VIGI PS30

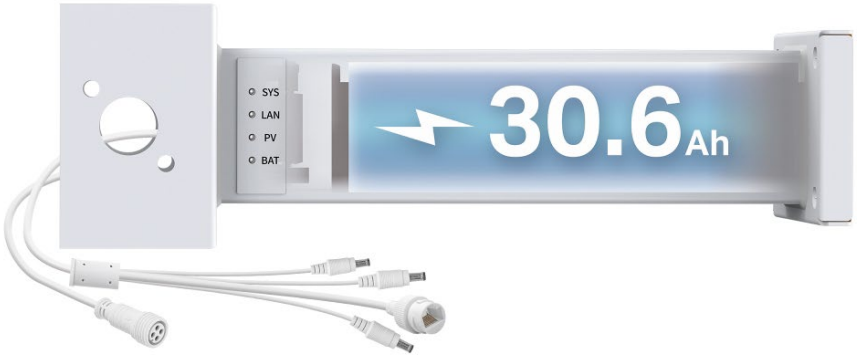

Overview

With a 30.6Ah/10.8V high-capacity battery, this solar system controller delivers constant power to outdoor equipment such as network bridges and cameras. Perfect for areas where network and power deployment is tough, it eradicates wiring hassles and cuts investment costs.

Highlight

Smart Battery Delivers Optimal Performance

The built-in smart battery supports intelligent auxiliary heating technology, which allows the battery to operate normally across a wide temperature range.

High System Stability, All-Weather Operation

The horizontal mount is made of high-quality SGCC galvanized steel with increased strength, anti-corrosion, and rust resistance. The solar panel is fringed with high-quality aluminum, and 3.2mm tempered glass covers the surface to increase impact resistance.

IP66 Weatherproof

Ensures reliable performance even in harsh environments with rain and dust, reducing subsequent maintenance costs.

Remote Management

Monitor power statistics, get instant intrusion and low-battery alerts, update firmware, and reboot the system via the mobile app. The smart controller conducts real-time self-diagnostics and auto-restarts upon detecting faults, eliminating manual onsite troubleshooting. Enjoy peace of mind, no matter your location.

Network Topology

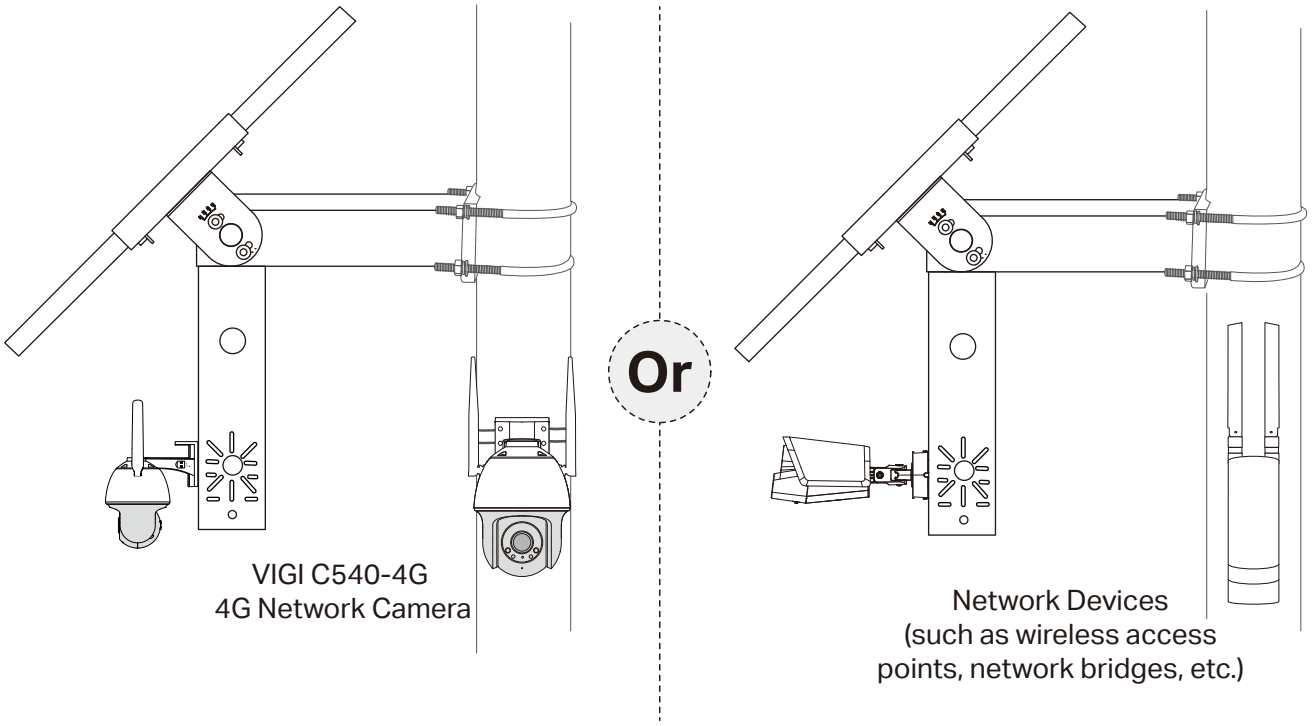

Build Features

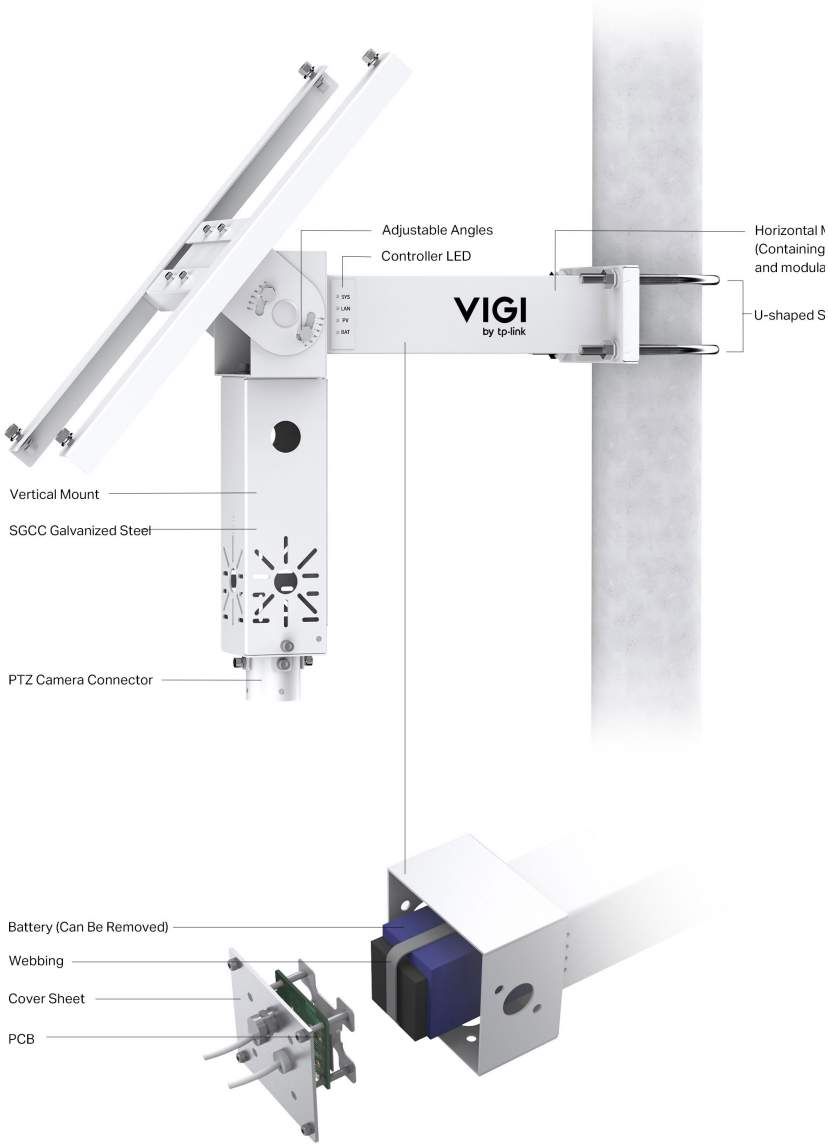

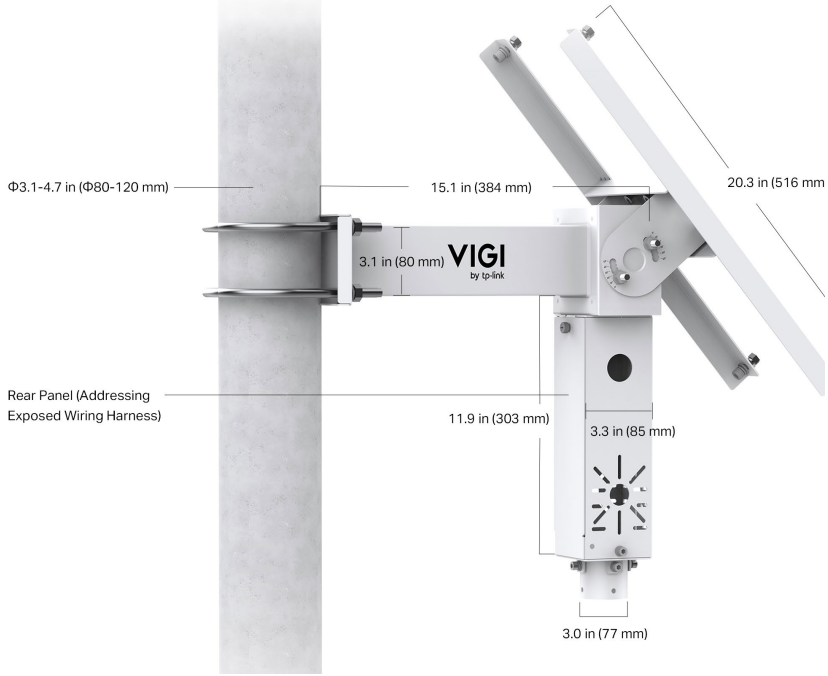

Specifications

Solar System Controller	
Product Model	VIGI PS30
Battery	
Type	Lithium
Intelligent Auxiliary Heat	Yes
Voltage	10.8 V
Battery Capacity	Nominal Capacity: 30.6 Ah Rated Capacity: 30 Ah Note: Nominal and rated capacities are stated in accordance with the battery cell specifications and standardized labeling practices. This does not affect the product's battery life or output performance in its intended use scenarios.
Max. Output Voltage	12.6 V
Life	More than 800 cycles[Δ]
Dimension	9.5 × 2.8 × 2.6 in (242 × 70 × 65 mm)
Charging Condition	• 0°C to 45°C (32 °F to 113 °F) • -30°C to 45°C (-22 °F to 113 °F) (With intelligent auxiliary heating)
Discharging Condition	• -20°C to 60°C (-4 °F to 140 °F) • -30°C to 60°C (-22 °F to 140 °F) (With intelligent auxiliary heating)
Hardware	
Interface	• 1× 10/100 Mbps RJ45 • 1× Photovoltaic Panel Connector • 3× 5.5mm DC Power Plugs (#1, #2: 9V-12.6 VDC/2A, #3: 12 VDC/2A)
Indicator LED	• Quantity: 4 (1× SYS Indicator, 1× LAN Indicator, 1× PV Indicator, 1× BAT Indicator) • Color: Blue
Software Feature	
Load Control	Yes
High and Low Temperature Protection	Yes
Overdischarge Protection	Yes
Power Consumption Statistics	Yes
Displays Real-time Load Status	Yes
Battery Level Display	Yes
Time Zone Selection	Yes
Region Selection	N/A
Schedule Saving	Yes
Firmware Remote Update	Yes
Remote Reboot	Yes
Local LAN Management	Yes
Intelligent Auxiliary Heating Control	-30°C to 5°C (-22 °F to 41 °F)
Account Management	Yes
Remote Reset	Yes
Remote Message Push	Yes

Others	
Certification	• CB, PSE (Battery) • CE, KC, FCC, IP66, VCCI, BSMI
Compatible Pole Diamete	Ø3.1-4.7 in (Ø80-120 mm)
Environment	• Operating Temperature: -30°C to 60°C (-22 °F to 140 °F) (With intelligent auxiliary heating) • Operating Humidity: 10%~90%RH, Non-condensing
Box Dimensions (W X D X H)	22.4 × 12.2 × 9.0 in (570 × 310 × 230 mm)
Package Weight	Package Weight: 11.2 kg
Package Contents	• VIGI Solar System Controller • Quick Start Guide • Waterproof Cable Attachments • Mounting Accessories

Dimensions

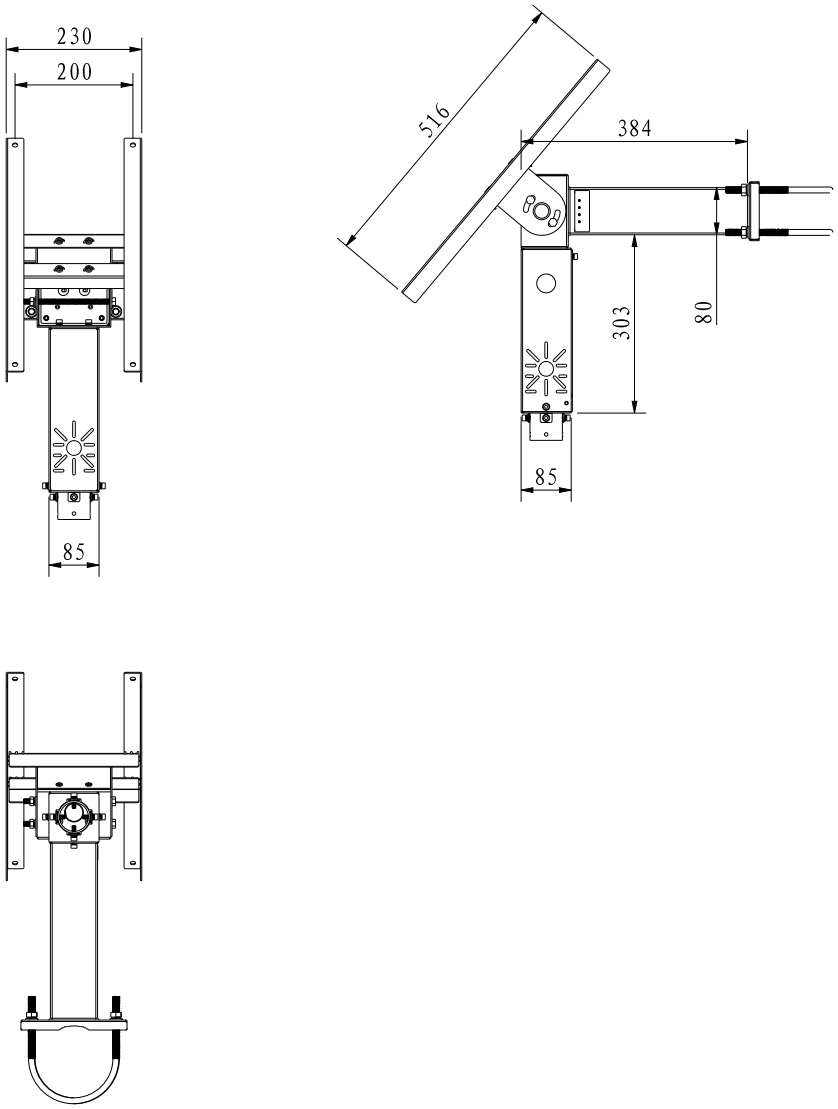

△A cycle represents one full charge and discharge. Based on 30Ah capacity with VIGI C540-4G, 500 cycles approximate a 10-year lifespan.

Specifications are subject to change without notice and can be found at www.vigi.com.

©2025 TP-Link